BENDI

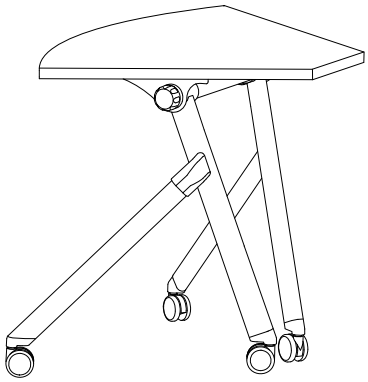

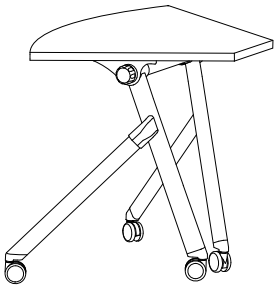

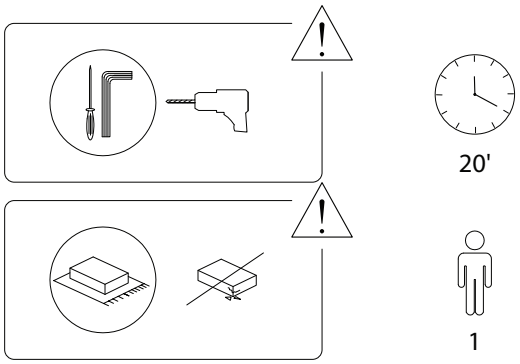

1	2	3	4
x 1	x 4	M10 x 10 x 2	M5 x 20 x 4

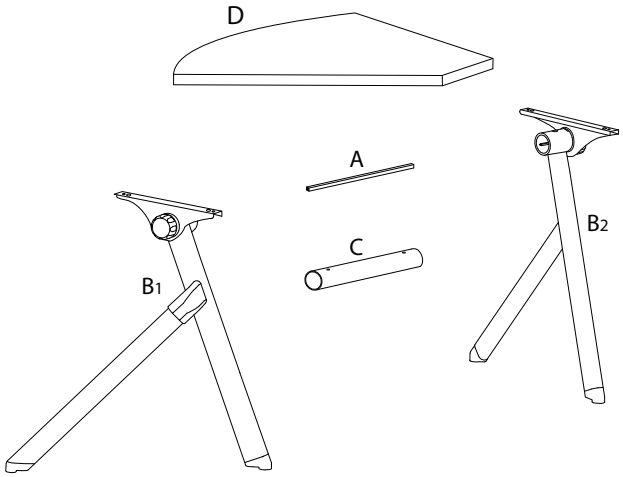

A	B1	B2	C	D
x 1	x 1	x 1	x 1	x 1

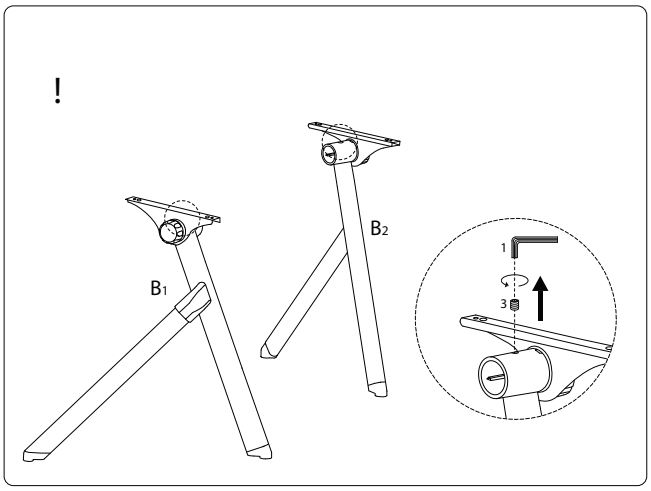

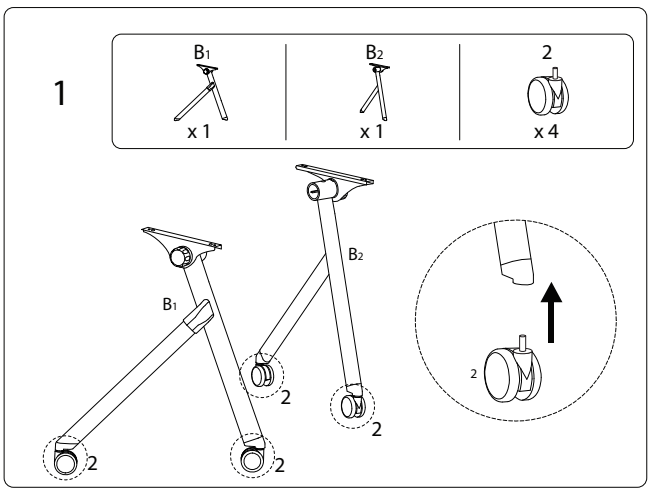

2

A	C
x 1	x 1

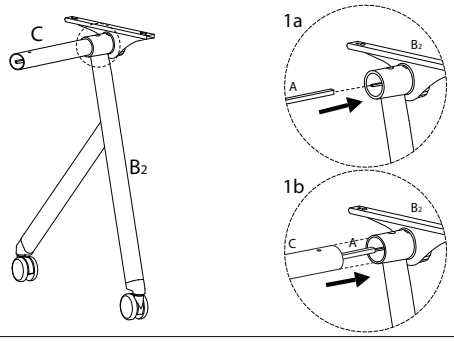

3

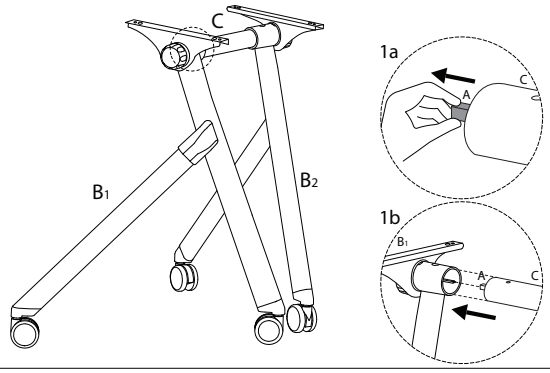

4

1	3
x 1	x 2

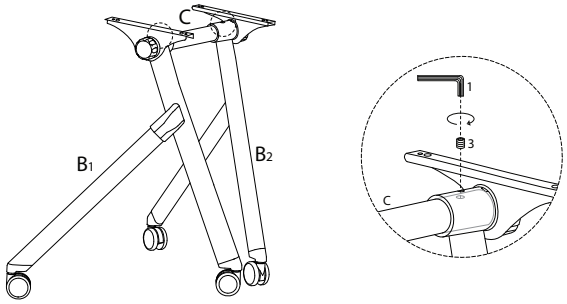

5

D	4
x 1	x 4

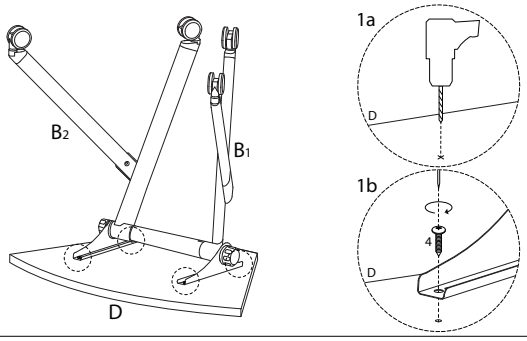
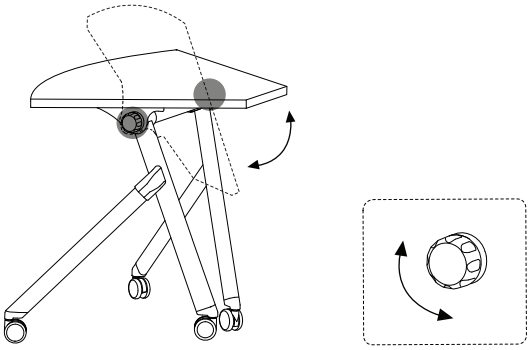
!