ARDAL

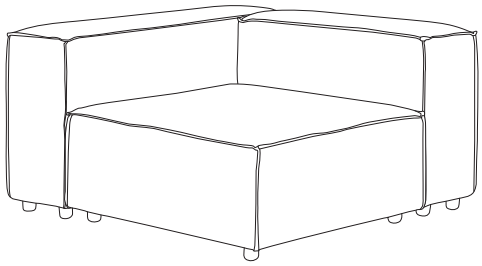

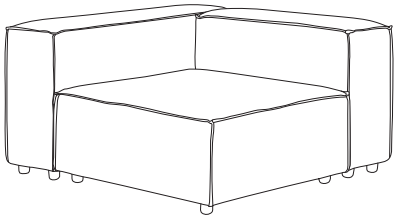

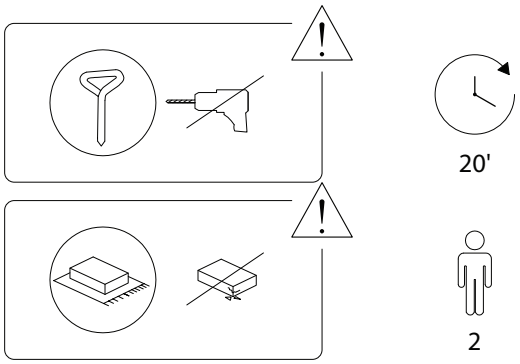
20'
2

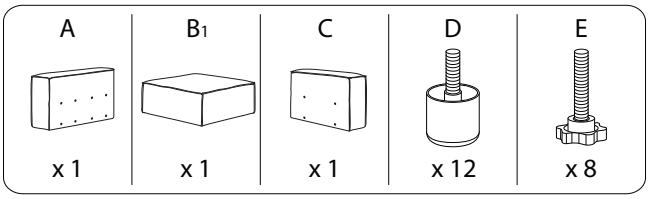
A
x 1
B1
x 1
C
x 1
D
x 12
E
x 8

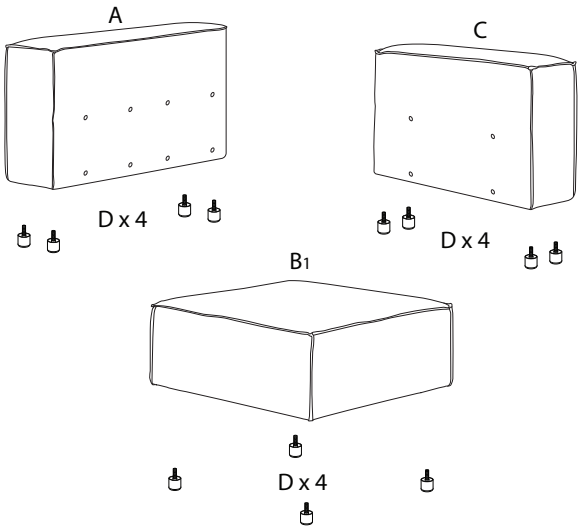
A
D x 4
C
D x 4
B1
D x 4

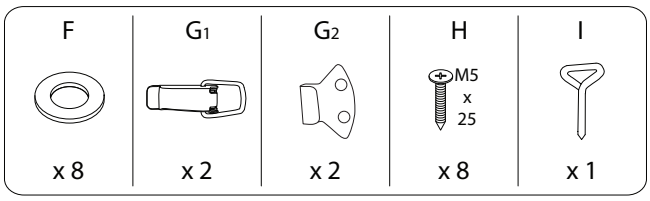
F
x 8
G1
x 2
G2
x 2
H
M5
x
25
x 8
I
x 1

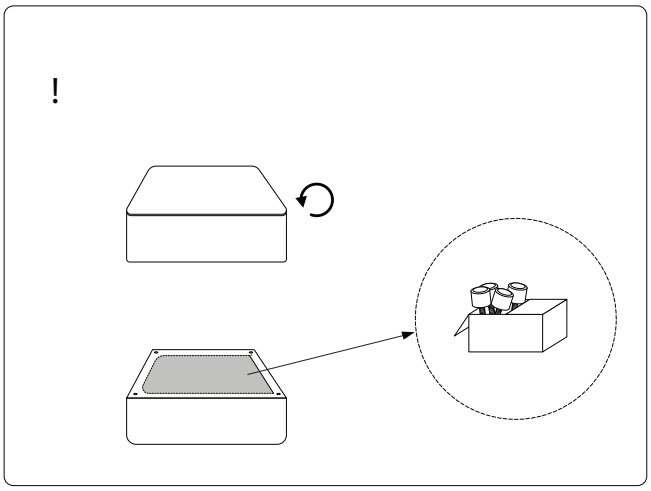
!

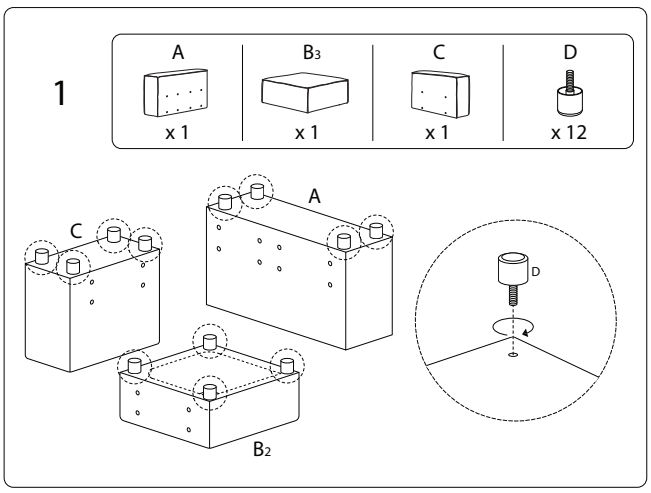
1
A
x 1
B3
x 1
C
x 1
D
x 12
C
A
D
B2

2R

E	F
x 4	x 4

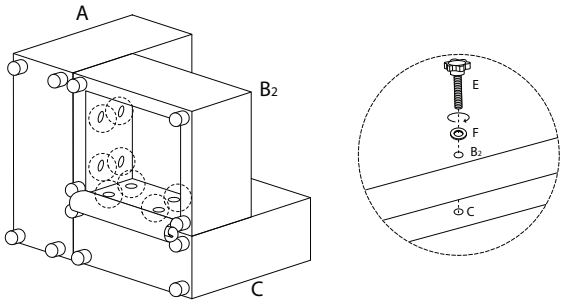

2L

E	F
x 4	x 4

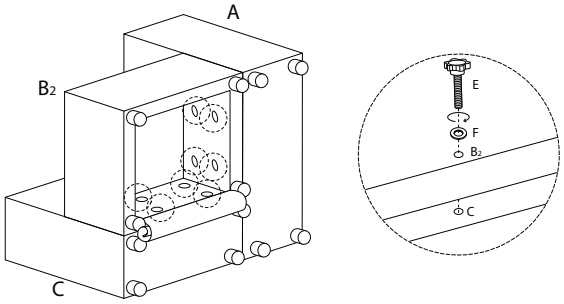

3R

G1	H	I
x 2	M5 x 25 x 4	x 1

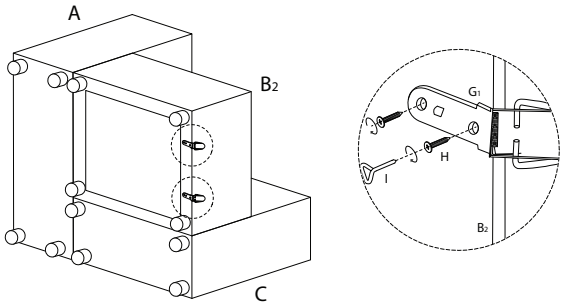

3L

G2	H	I
x 2	M5 x 25 x 4	x 1

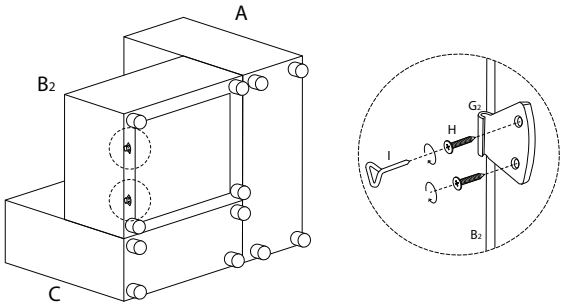
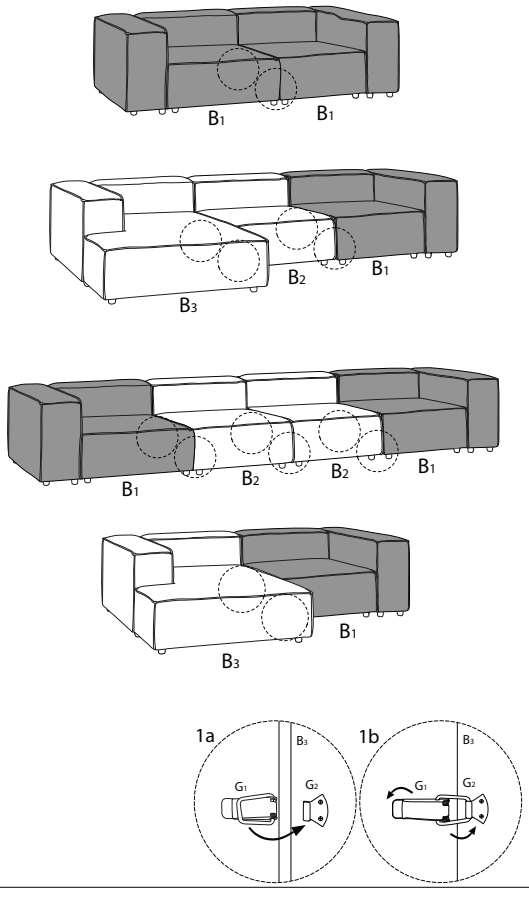
!