Montageanleitung | Instructions de montage Assembly Instructions| Instrucciones de montaje

SKU NUMBER: N616P425626/N616P425627
N616P425628(180 x 200)

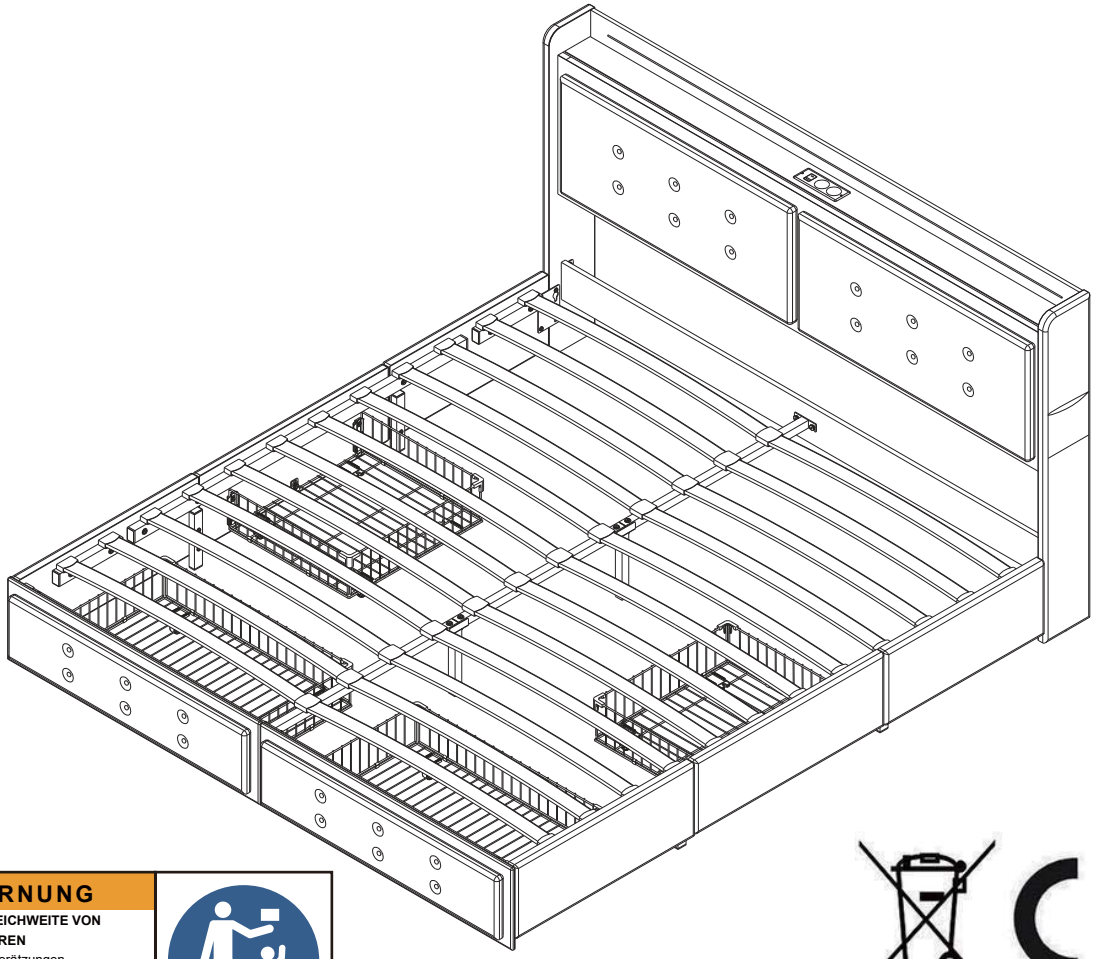

⚠ WARNUNG

AUSSERHALB DER REICHWEITE VON KINDERN AUFBEWAHREN
Verschlucken kann zu Verätzungen, Weichteilperforationen und zum Tod führen. Schwere Verätzungen können innerhalb von zwei Stunden nach Einnahme auftreten. Suchen Sie sofort einen Arzt auf.

GB This set comes in 3 boxes. If you do not receive a full set of 3 boxes, please contact our customer service.

DE Dieses Set wird in 3 Schachteln geliefert. Wenn Sie nicht ein komplettes Set von 3 Boxen erhalten, kontaktieren Sie bitte unseren Kundenservice.

FR Ce set est livré en 3 boîtes. Si vous ne recevez pas un jeu complet de 3 boîtes, veuillez contacter notre service clientèle.

English

IMPORTANT ! KEEP FOR FUTURE REFERENCE : READ CAREFULLY

- To be assembled by an adult. Assembly must be checked by an adult before use
- WARNING ! Keep all screws, small parts and plastic bags out of the reach of children
- Properly identify all parts before assembling
- Never use your item if any of its parts are broken or missing
- Should any problems arise, please contact our After Sales Service
- Manufacturer's instructions shall be followed at all times
- Care: Clean with a soft, dry cloth. In case of larger stains, carefully rub with a slightly damp, non-abrasive sponge
- Avoid the risk of fire by not placing furniture near sources of ignition or hot items
- Do not jump on the bed

Deutsch

WICHTIG ! ZUM SPÄTEREN NACHSCHLAGEN AUFBEWAHREN: SORGFÄLTIG LESEN

- Muss von einem Erwachsenen zusammengebaut werden.Der Zusammenbau muss vor dem Gebrauch von einem Erwachsenen überprüft werden
- WARNUNG! Bewahren Sie alle Schrauben, Kleinteile und Plastikbeutel außerhalb der Reichweite von Kindern auf
- Kennzeichnen Sie vor dem Zusammenbau alle Teile richtig
- Benutzen Sie Ihren Artikel niemals, wenn Teile gebrochen sind oder fehlen
- Sollten Probleme auftreten, wenden Sie sich bitte an unseren Kundendienst
- Die Anweisungen des Herstellers sind stets zu befolgen
- Pflege: Mit einem weichen, trockenen Tuch reinigen. Bei größeren Flecken vorsichtig mit einem leicht feuchten, nicht scheuernden Schwamm abreiben. nicht scheuernden Schwamm
- Vermeiden Sie die Gefahr eines Brandes, indem Sie die Möbel nicht in der Nähe von Zündquellen oder heißen Gegenständen aufstellen
- Nicht auf das Bett springen

Français

IMPORTANT ! CONSERVER POUR RÉFÉRENCE ULTÉRIEURE : LIRE ATTENTIVEMENT

- Le montage doit être effectué par un adulte. Le montage doit être vérifié par un adulte avant Utilisation
- ATTENTION ! Tenir les vis, les petites pièces et les sachets en plastique hors de portée des enfants
- Identifiez correctement toutes les pièces avant de les assembler
- N'utilisez jamais votre article si l'une de ses pièces est cassée ou manquante
- En cas de problème, veuillez contacter notre service après-vente
- Les instructions du fabricant doivent être respectées à tout moment
- Entretien : nettoyer avec un chiffon doux et sec. En cas de taches plus importantes, frotter soigneusement avec une éponge non abrasive légèrement humide. légèrement humide et non Abrasive
- Évitez les risques d'incendie en ne plaçant pas les meubles à proximité de sources d'inflammation ou d'objets chauds
- Ne pas sauter sur le lit

Italiano

IMPORTANTE! CONSERVARE PER RIFERIMENTO FUTURO: LEGGERE ATTENTAMENTE

- Deve essere assemblato da un adulto. L'assemblaggio deve essere controllato da un adulto prima dell'uso
- ATTENZIONE! Tenere tutte le viti, le piccole parti e i sacchetti di plastica fuori dalla portata dei bambini
- Identificare correttamente tutte le parti prima dell'assemblaggio
- Non utilizzare mai l'articolo se alcune parti sono rotte o mancanti
- In caso di problemi, si prega di contattare il nostro Servizio Post Vendita
- Le istruzioni del produttore devono essere sempre seguite
- Cura: Pulire con un panno morbido e asciutto. In caso di macchie più estese, strofinare accuratamente con una spugna leggermente umida e nonspugna leggermente umida e non abrasiva
- Evitare il rischio di incendio, non collocando i mobili vicino a fonti di accensione o a oggetti caldi
- Non saltare sul letto

Español

¡ IMPORTANTE ! CONSÉRVELO PARA FUTURAS CONSULTAS: LEA ATENTAMENTE

- Debe ser montado por un adulto. El montaje debe ser comprobado por un adulto antes del uso

ADVERTENCIA Mantenga todos los tornillos, piezas pequeñas y bolsas de plástico fuera del alcance de los niños.

- Identifique correctamente todas las piezas antes de montarlas
- Nunca utilice su artículo si alguna de sus piezas está rota o falta
- Si surge algún problema, póngase en contacto con nuestro Servicio Postventa
- Las instrucciones del fabricante deben seguirse en todo momento
- Cuidado: Limpiar con un paño suave y seco. En caso de manchas más grandes, frote cuidadosamente con una esponja no abrasiva ligeramente humedecida.
- Evite el riesgo de incendio no colocando los muebles cerca de fuentes de ignición u objetos calientes.
- No saltar sobre la cama.

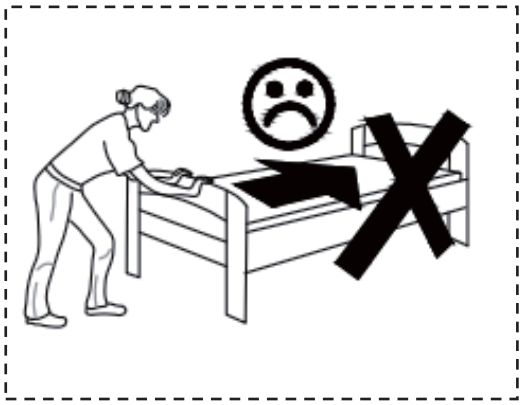

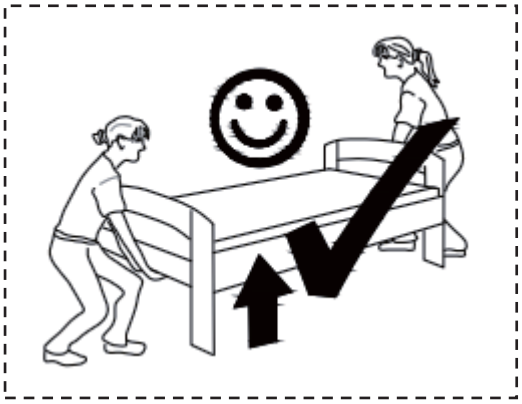

Stückliste

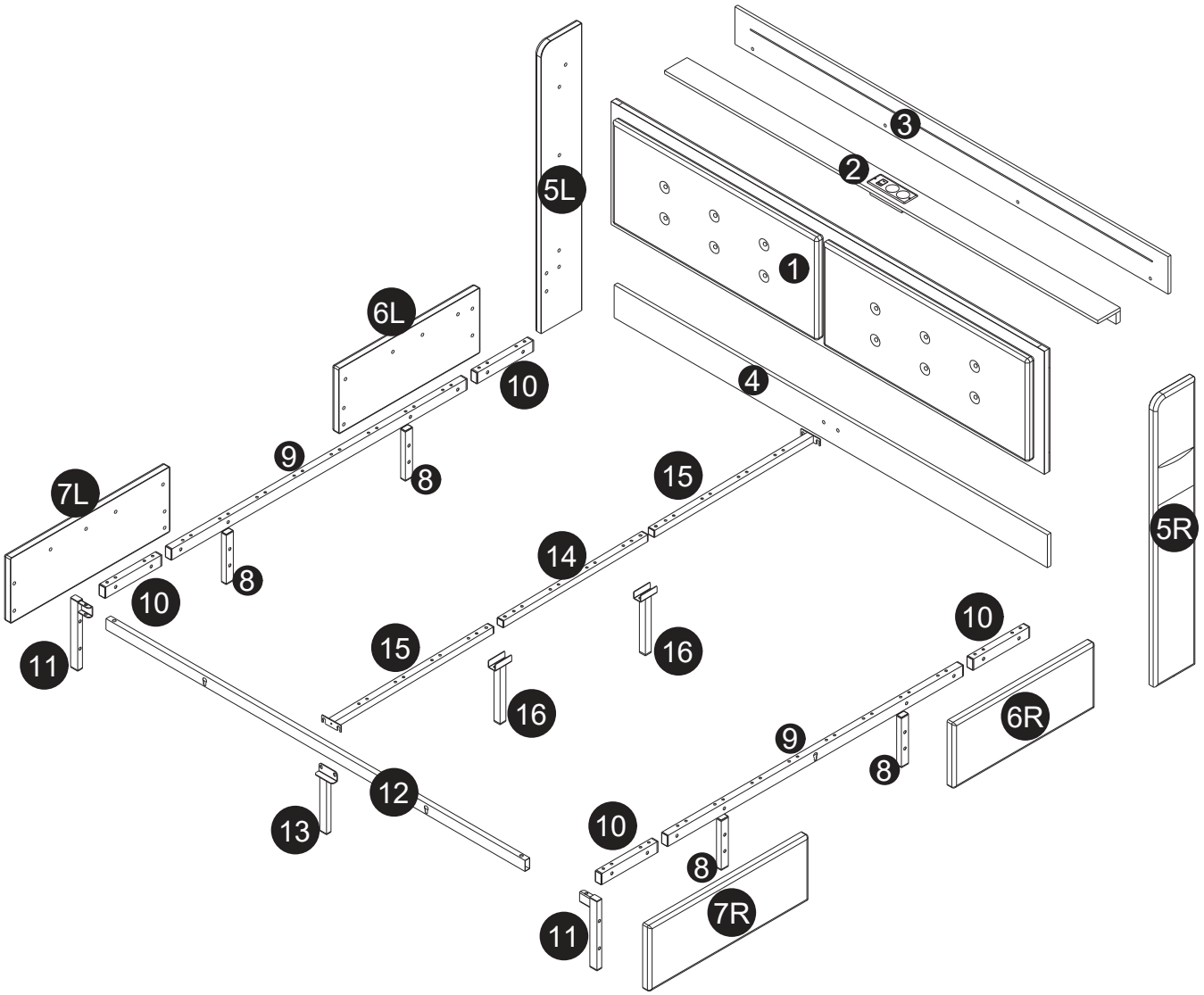

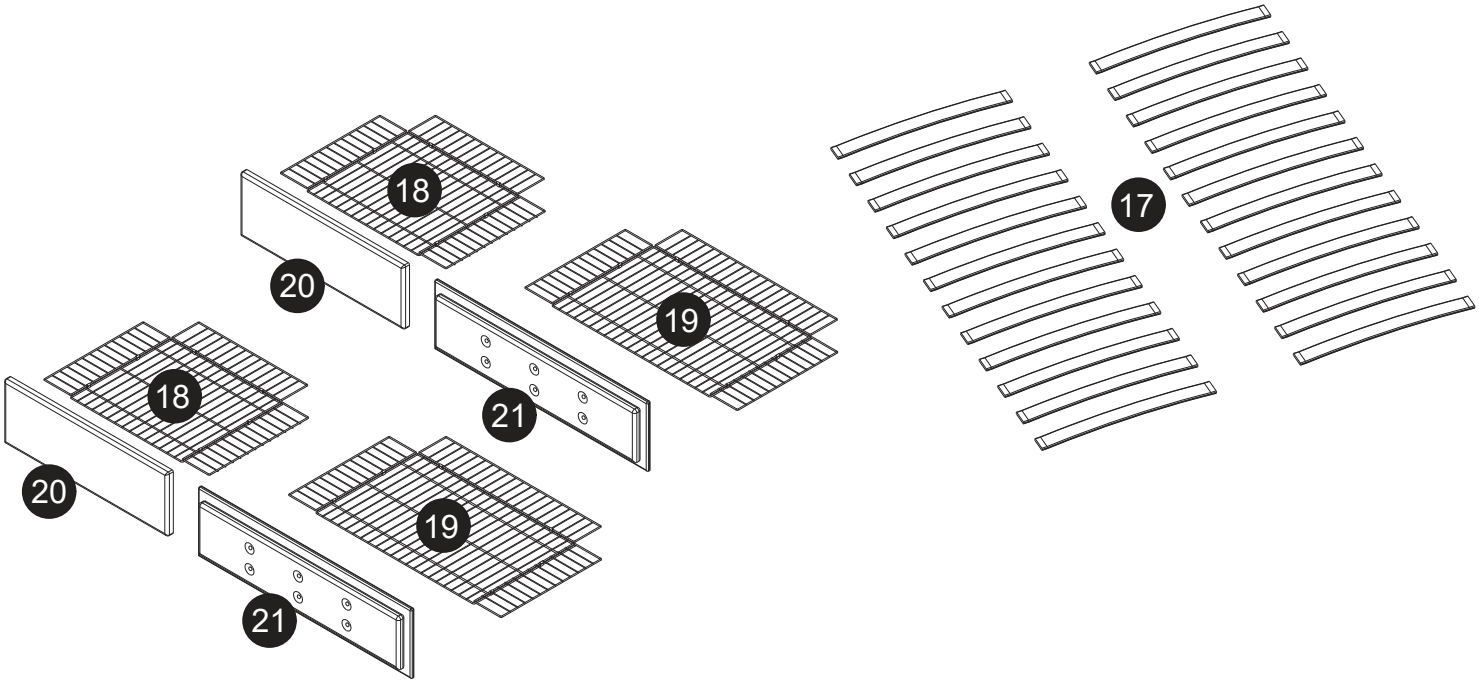

N616P425626

1	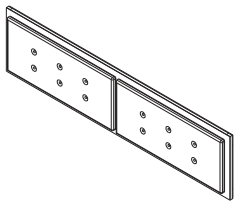	X1

N616P425627

2	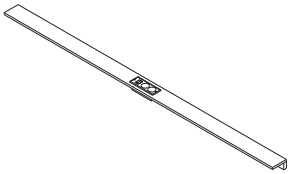	X1
3	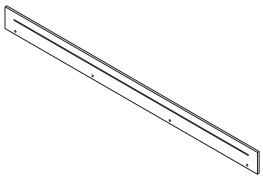	X1
4	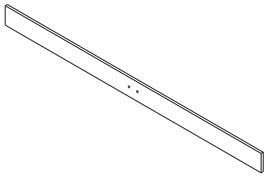	X1
5L		X1
5R	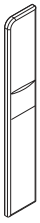	X1
8	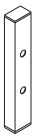	X4
9	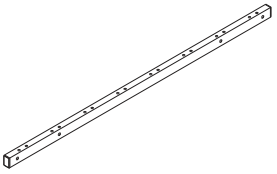	X2
10	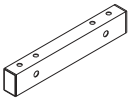	X4
11	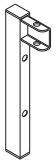	X2
12	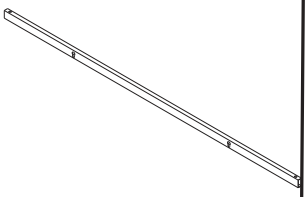	X1
13	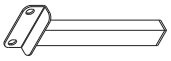	X1
14		X1
15		X2
16		X2

N616P425628

6L	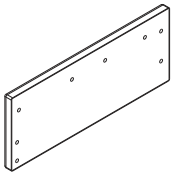	X1
6R	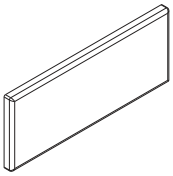	X1
7L	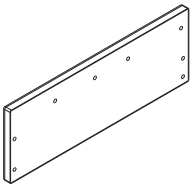	X1
7R	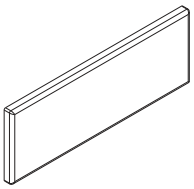	X1
17	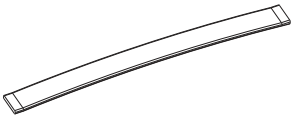	X24
18	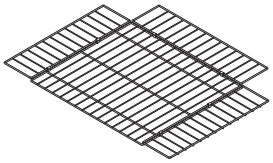	X2
19	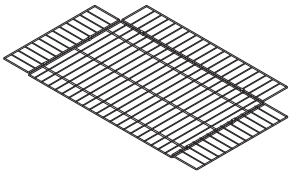	X2
20	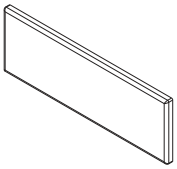	X2
21	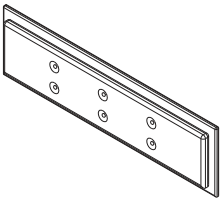	X2

Hardware List-Hardware-Liste-Liste du matériel

N616P425627

T		X8	V		X16	X		X1
U		X8	W		X4	Y		X1
						Z		X1

Hardware List-Hardware-Liste-Liste du matériel

N616P425628

A		X1	G	M8x40mm	X24	M		X10
C	M8x16mm	X56	H	M8x50mm	X2	N		X2
D	M8x18mm	X4	J		X24	P		X2
E	M8x25mm	X4	K	M8	X2	Q		X24
F	M8x30mm	X12	L		X1	S		X12

1

A x 1	C x 6	M x 6
	M8 x 16mm	

The bottom of the iron sheet needs to be flush with the edge of the part 2.
Le fond de la tôle doit être affleversé avec le bord de la partie 2.
Das blech muß mit der kante Von teil 2 ebenert werden.

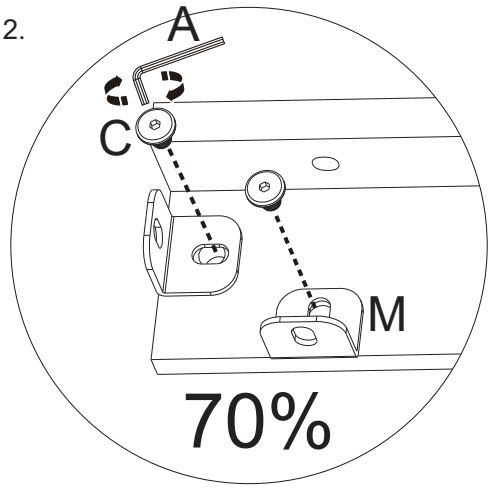

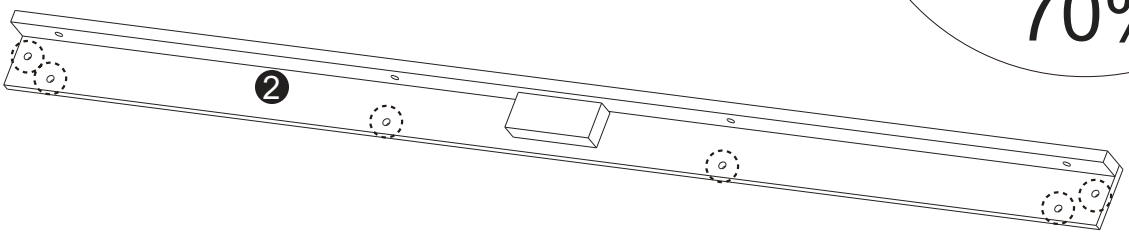

2

A x 1	C x 4
	M8 x 16mm

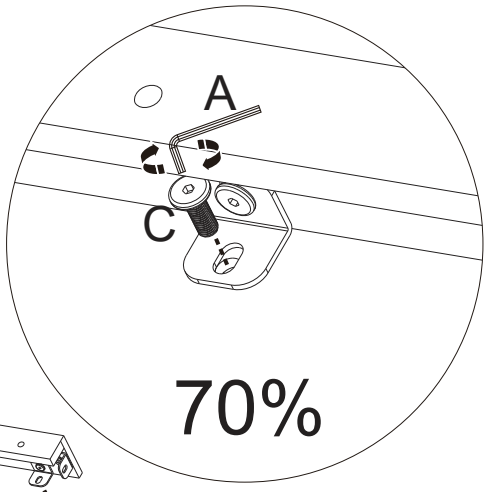

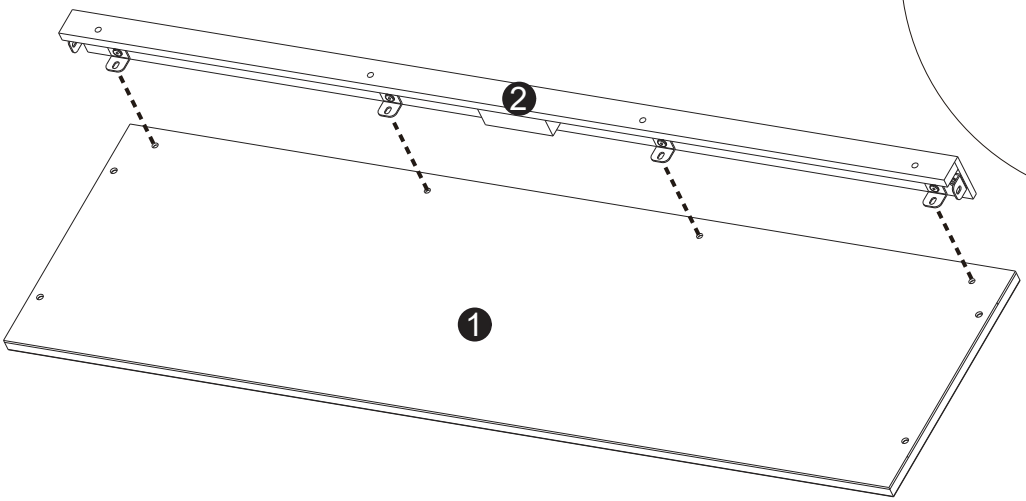

3

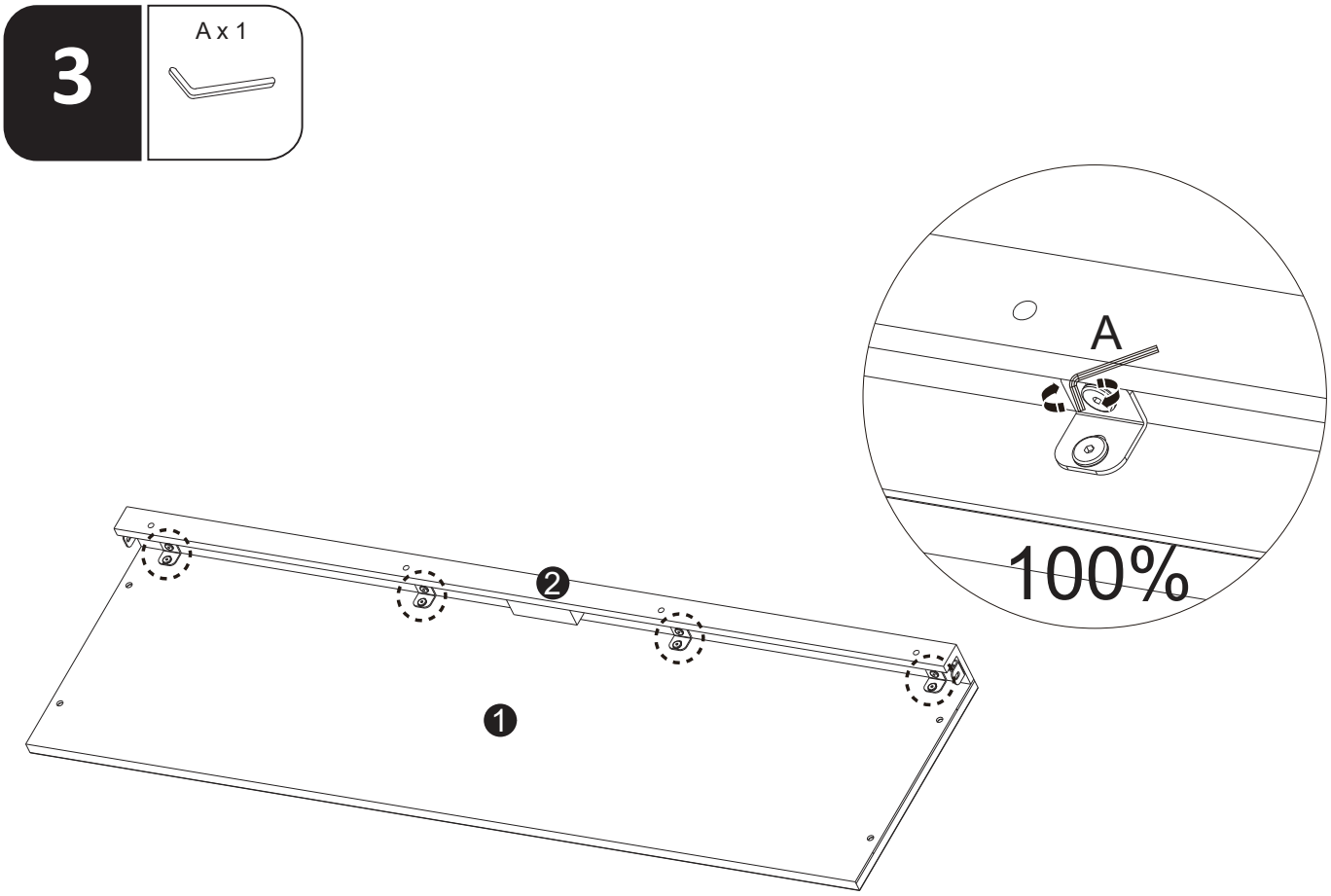

4

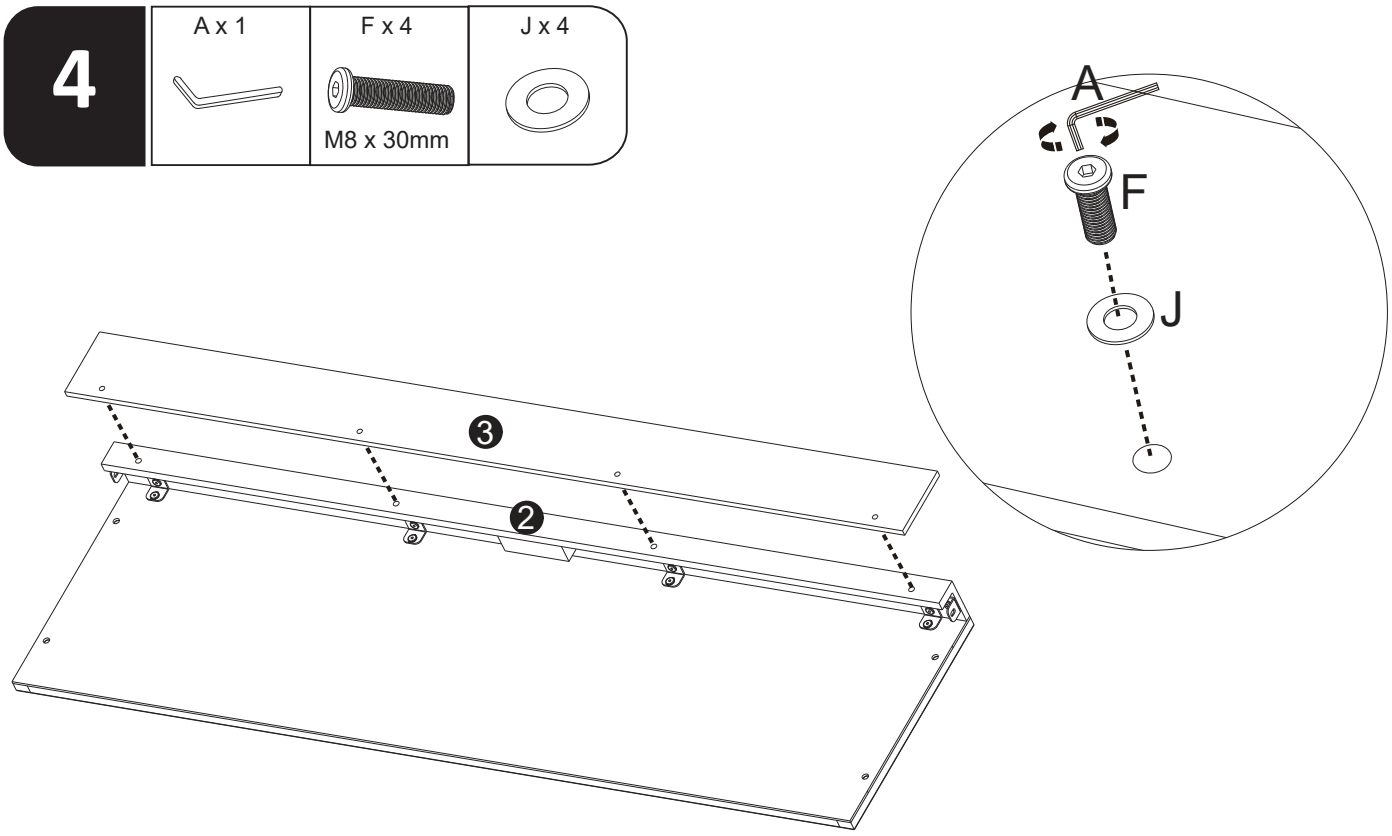

5

A x 1	C x 18	M x 4	N x 2
	M8 x 16mm		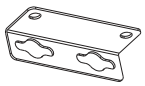

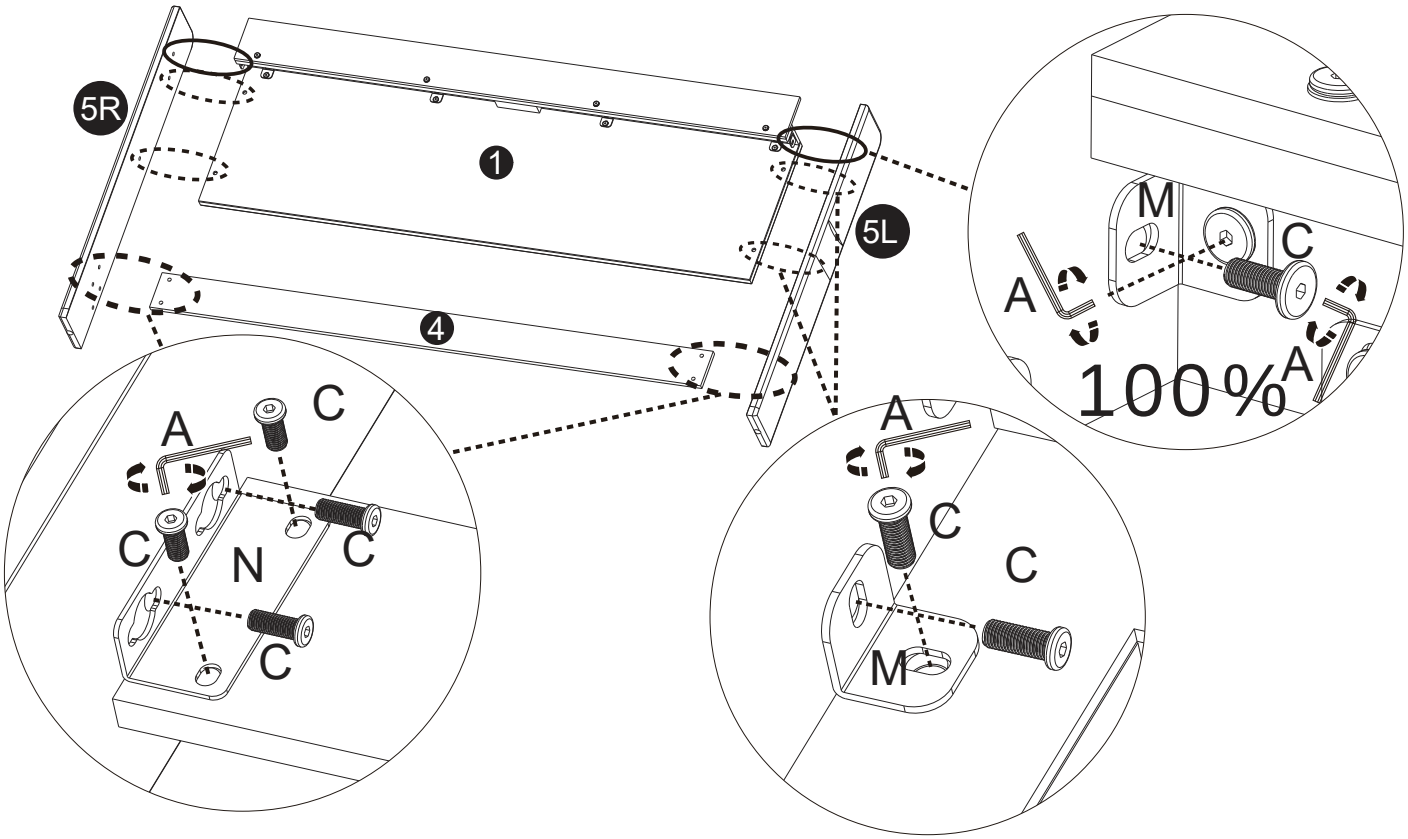

6

A x 1	C x 4	P x 2
	M8 x 16mm	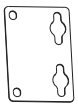

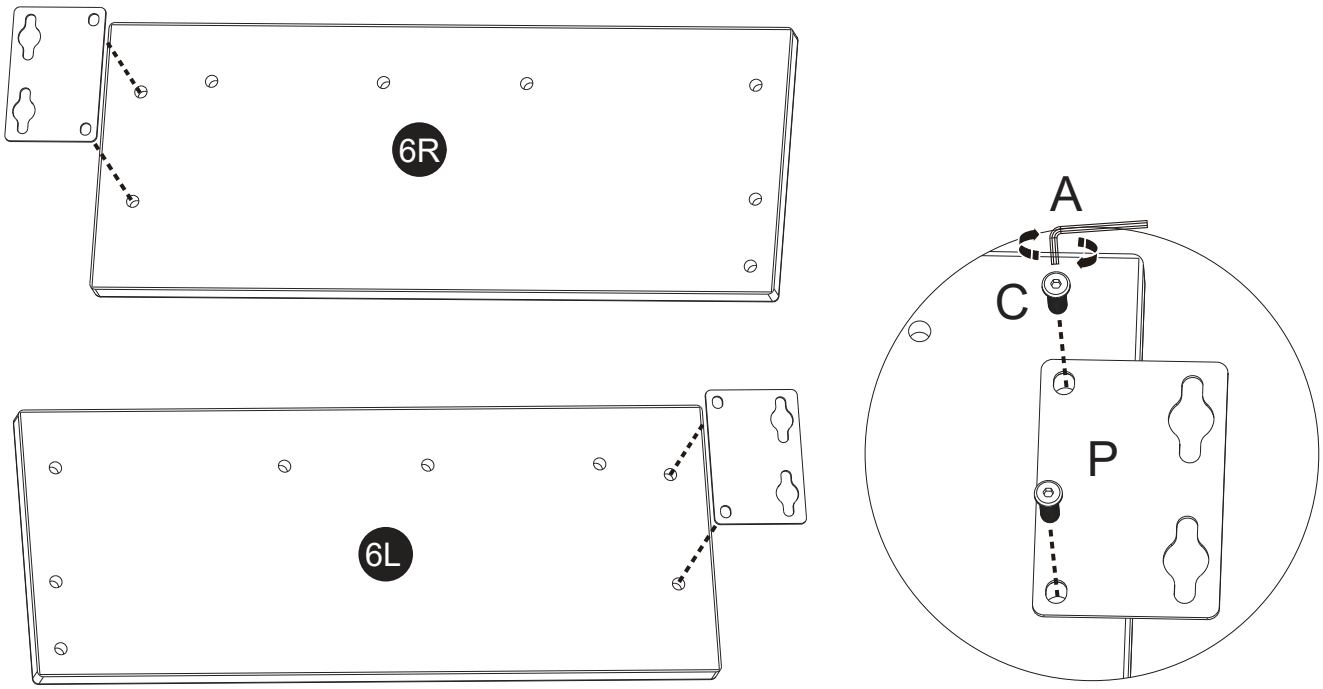

7

A x 1	F x 8
	M8 x 30mm

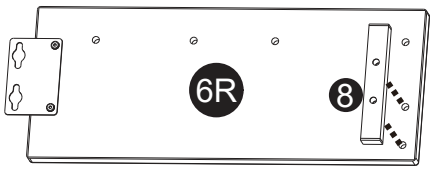

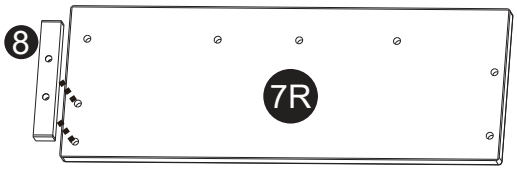

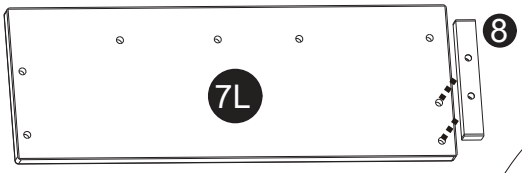

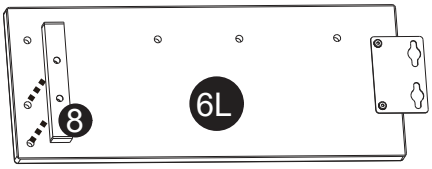

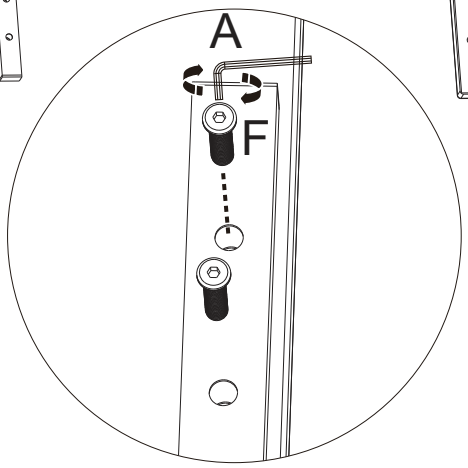

8

A x 1	G x 20	J x 16
	M8 x 40mm	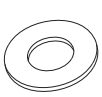

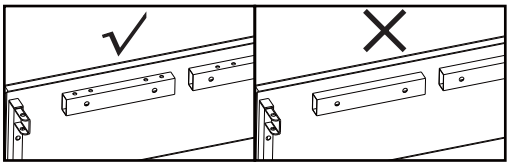

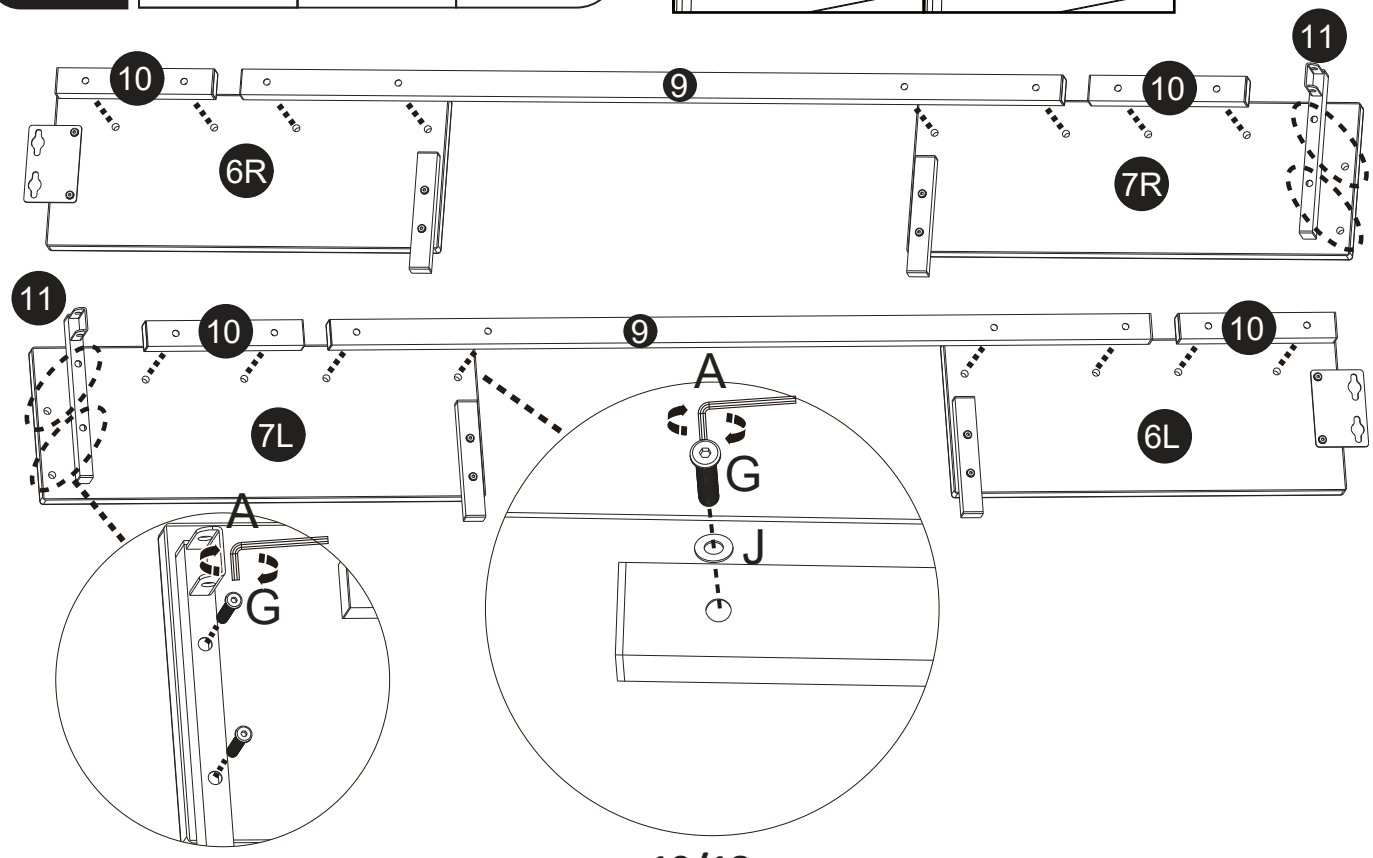

9

A x 1	D x 4
	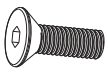 M8 x 18mm

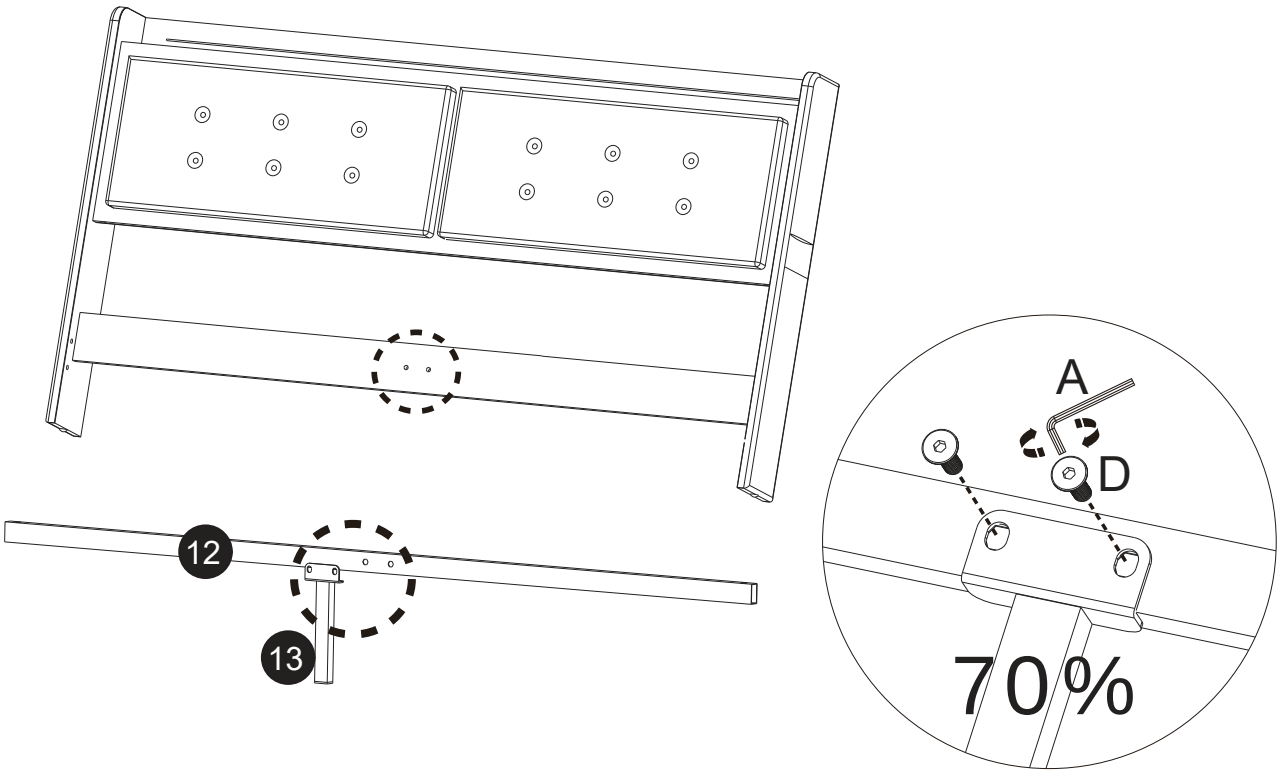

10

A x 1	H x 2	K x 2	L x 1
	M8 x 50mm		

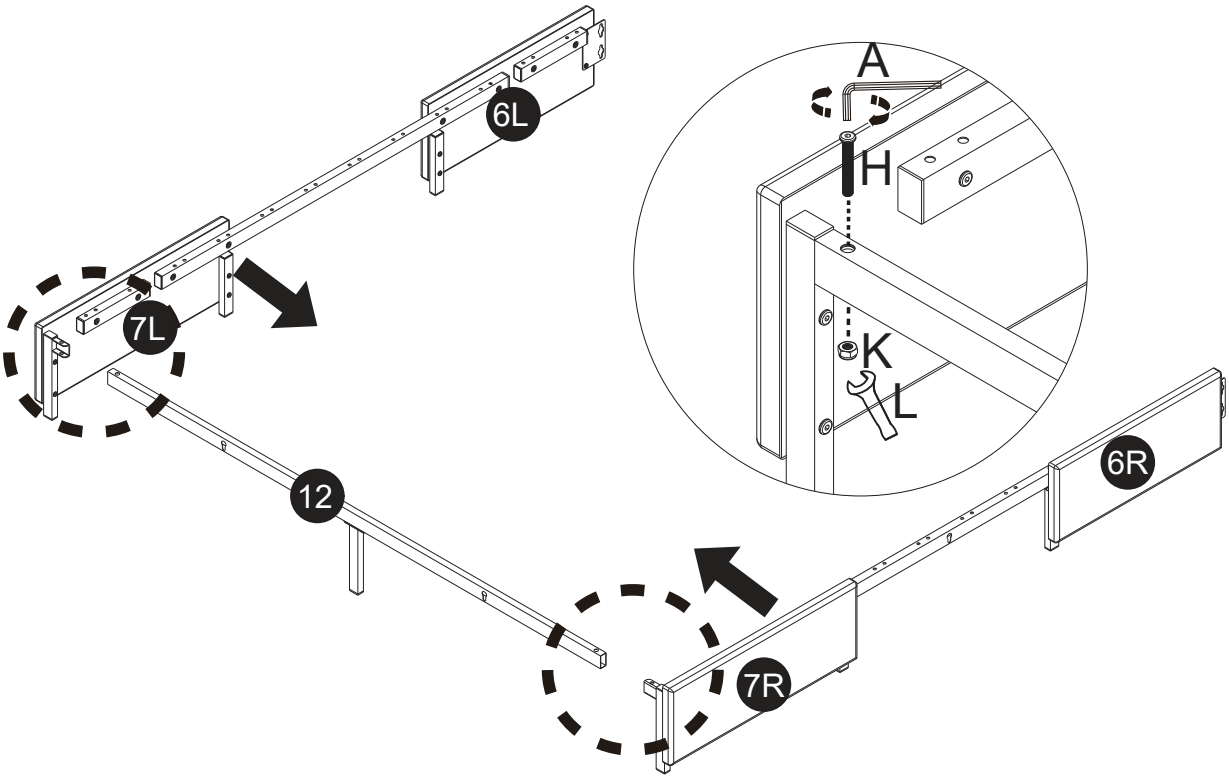

11

A x 1	C x 4
	M8 x 16mm

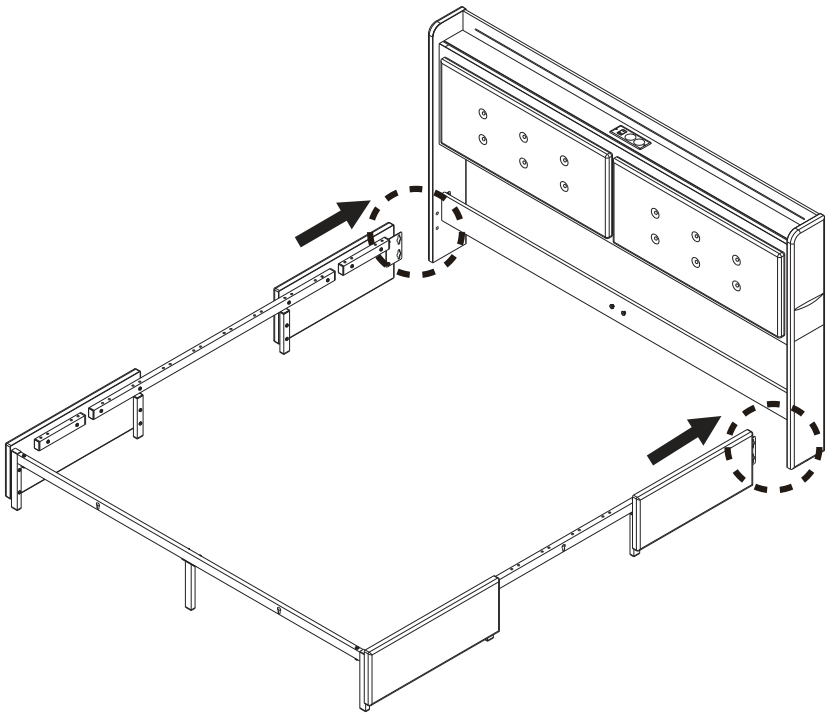

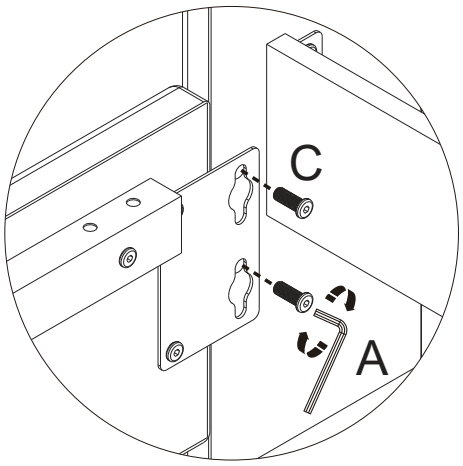

12

A x 1	G x 4	J x 4
	M8 x 40mm	

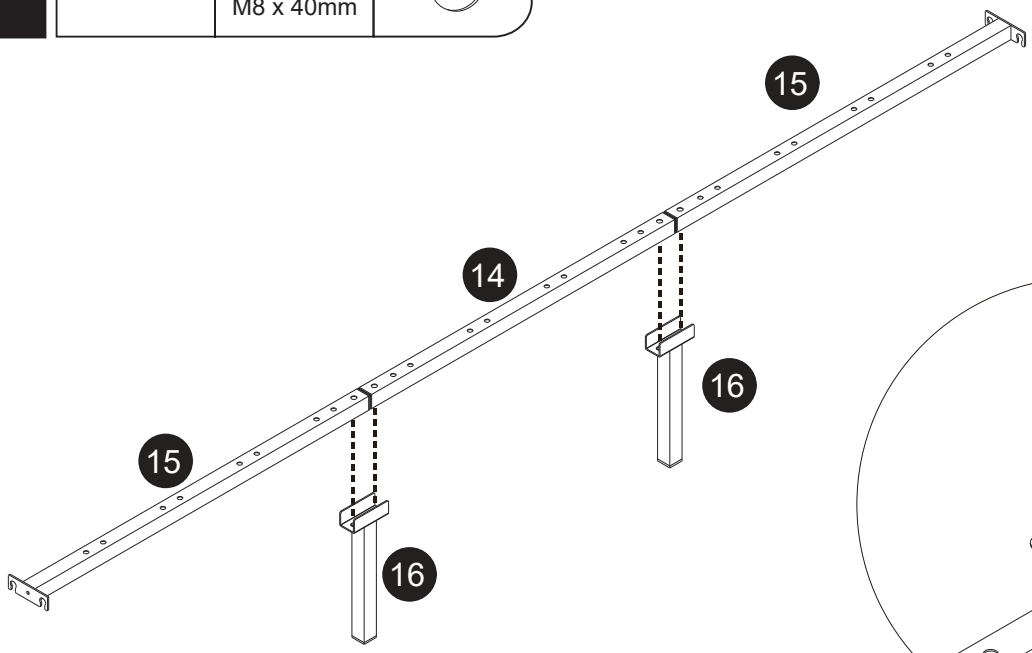

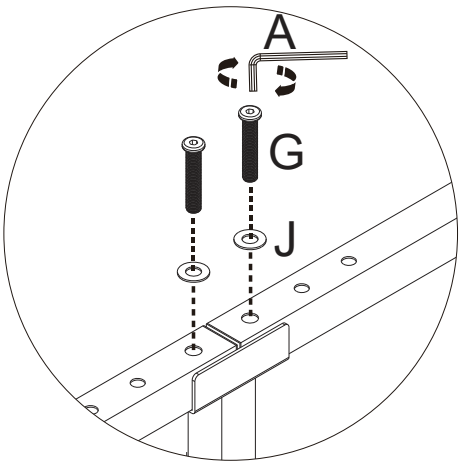

13

A x 1

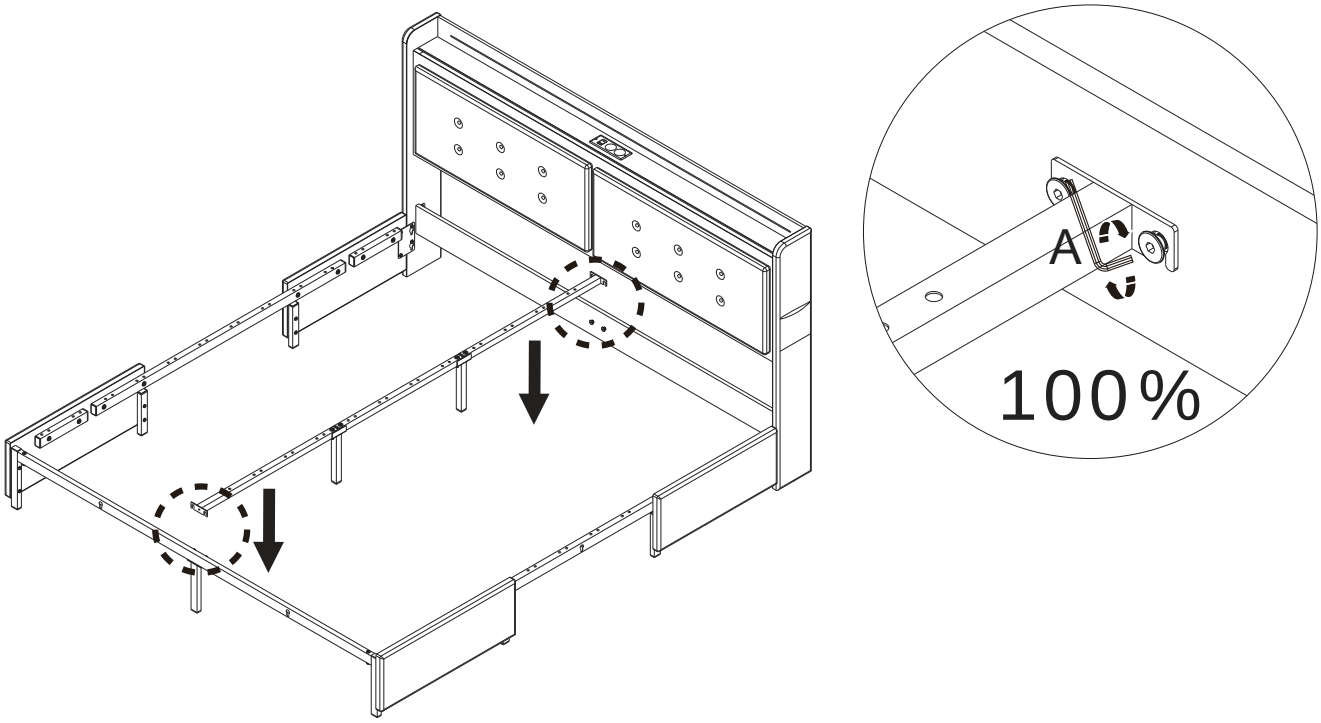

14

Q x 24

S x 12

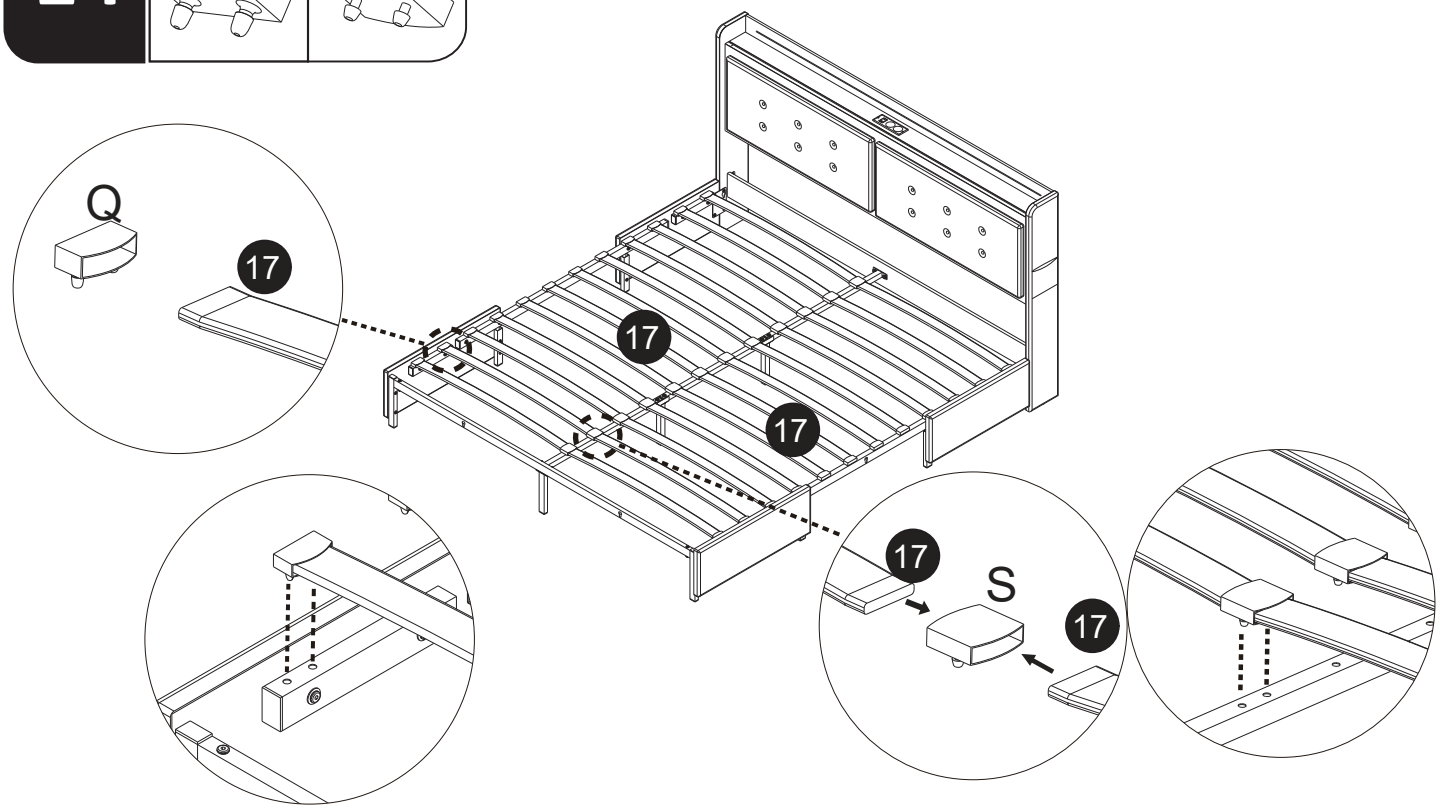

15

T x 8

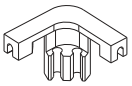

X 4

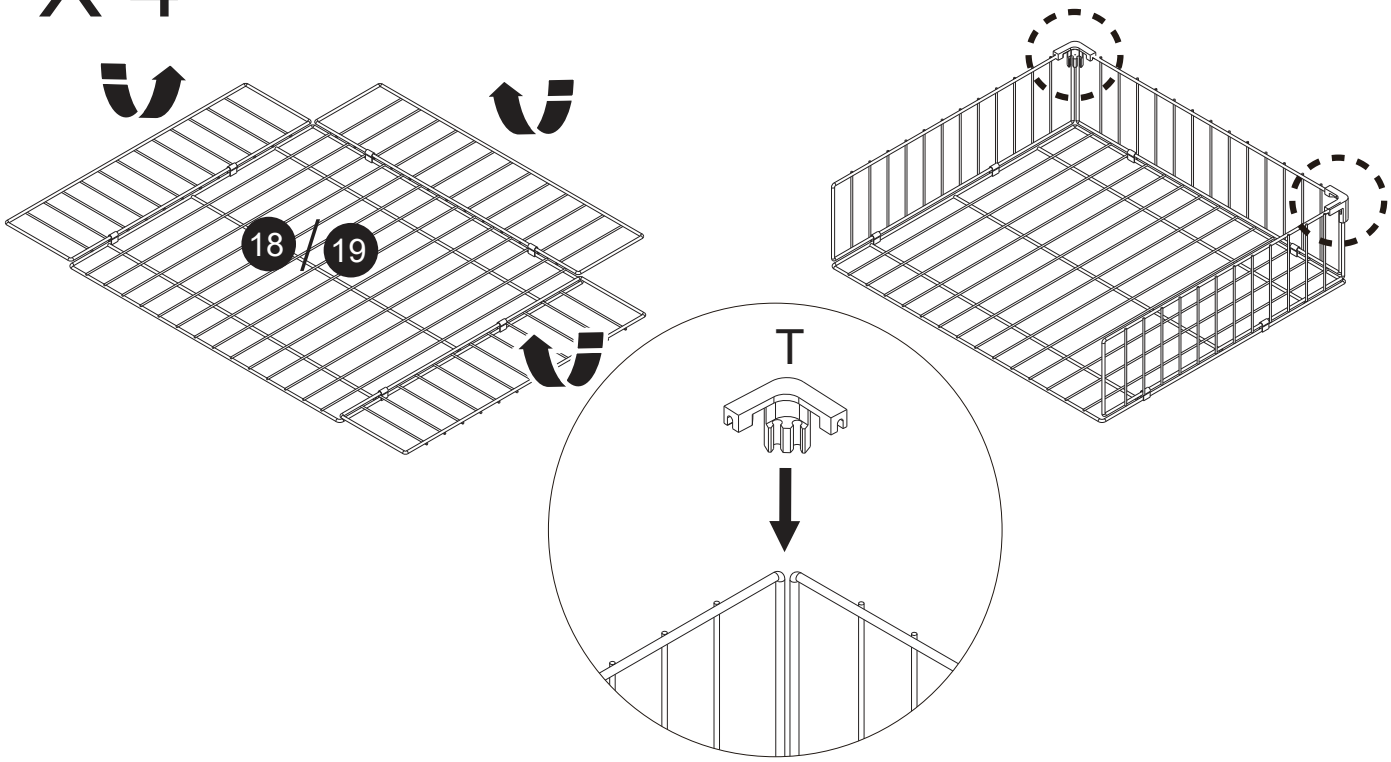

16

U x 8

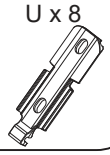

X 4

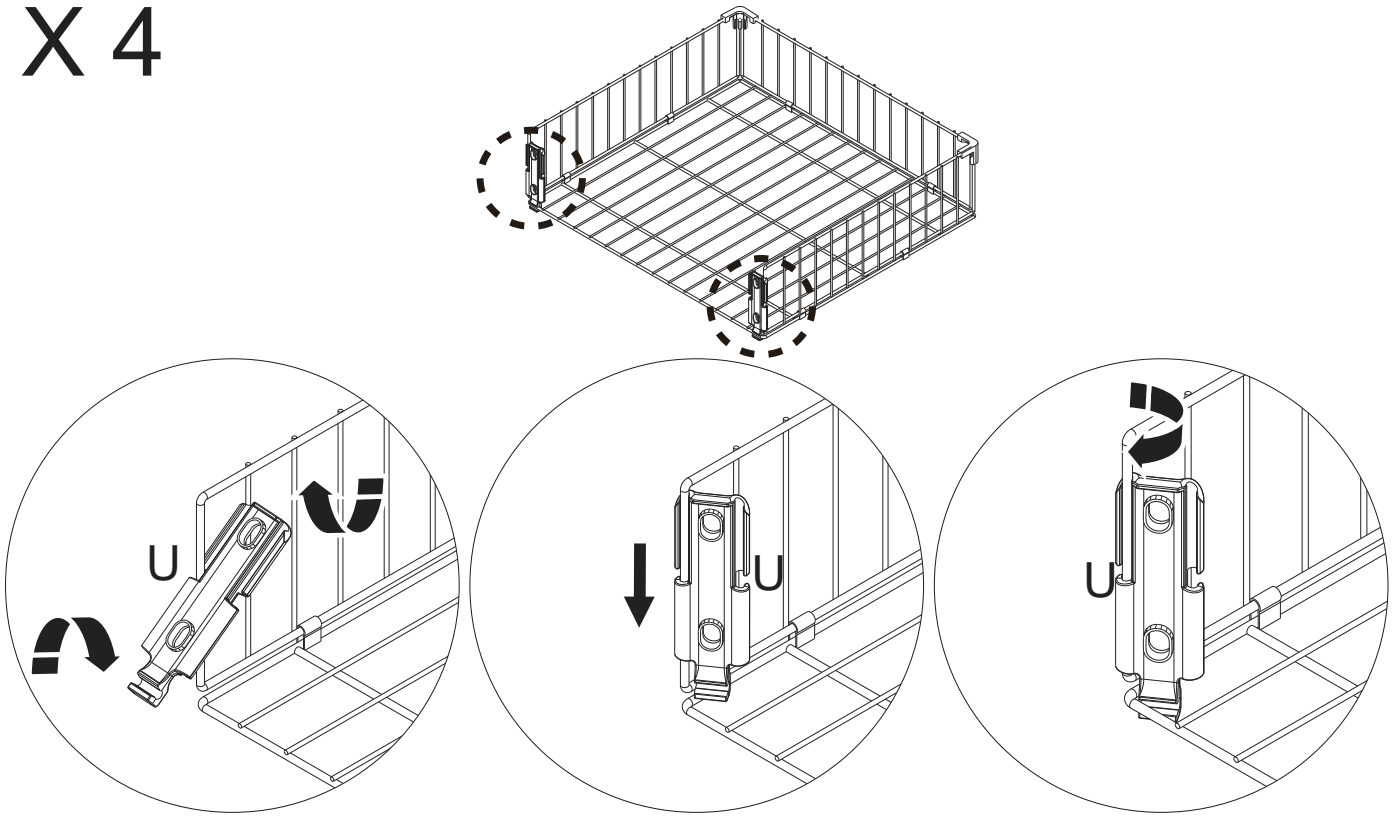

17

V x 16

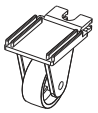

X 4

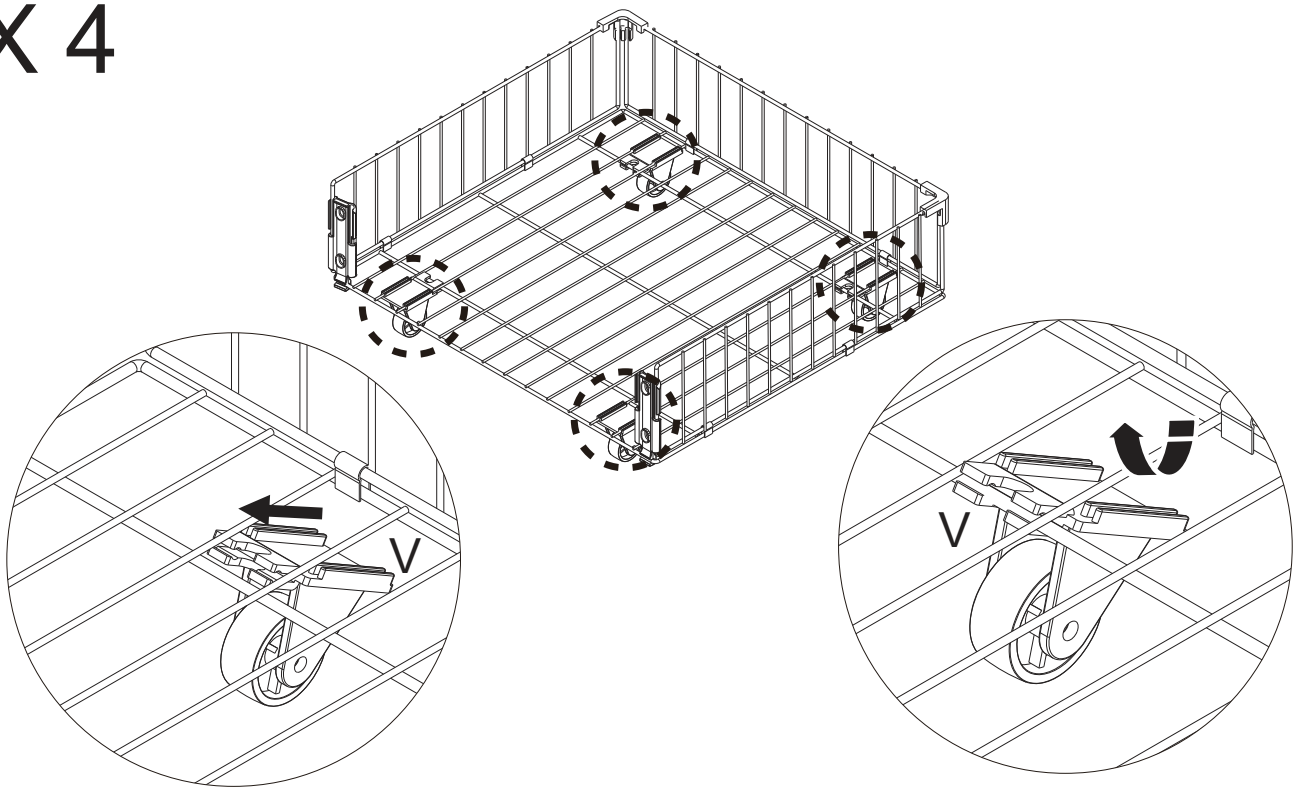

18

A x 1	C x 20	E x 4	Wx 4
	M8 x 16mm	M8 x 25mm	

X 2

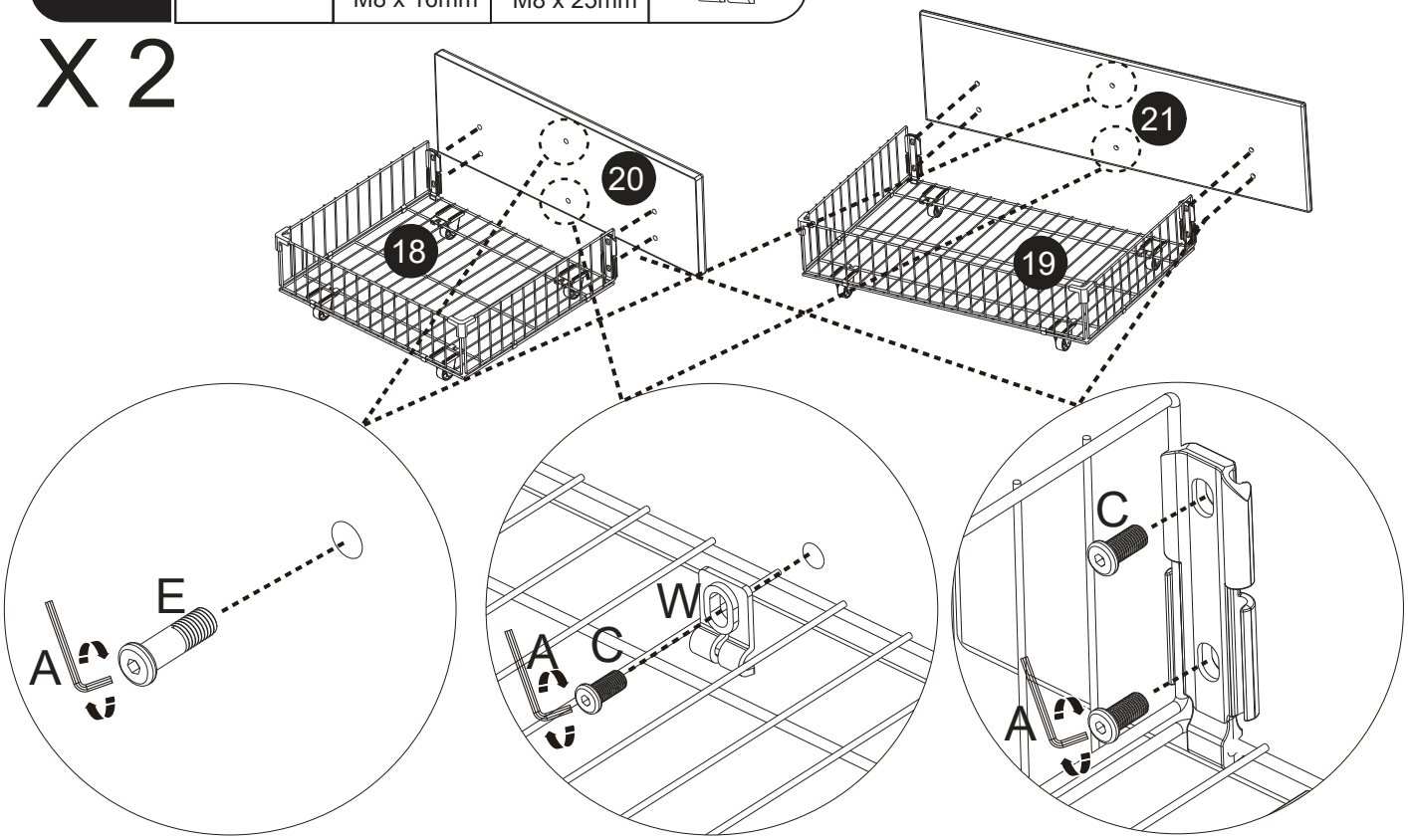

19

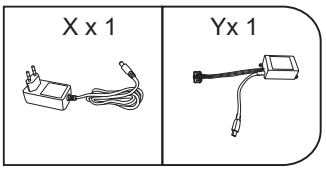

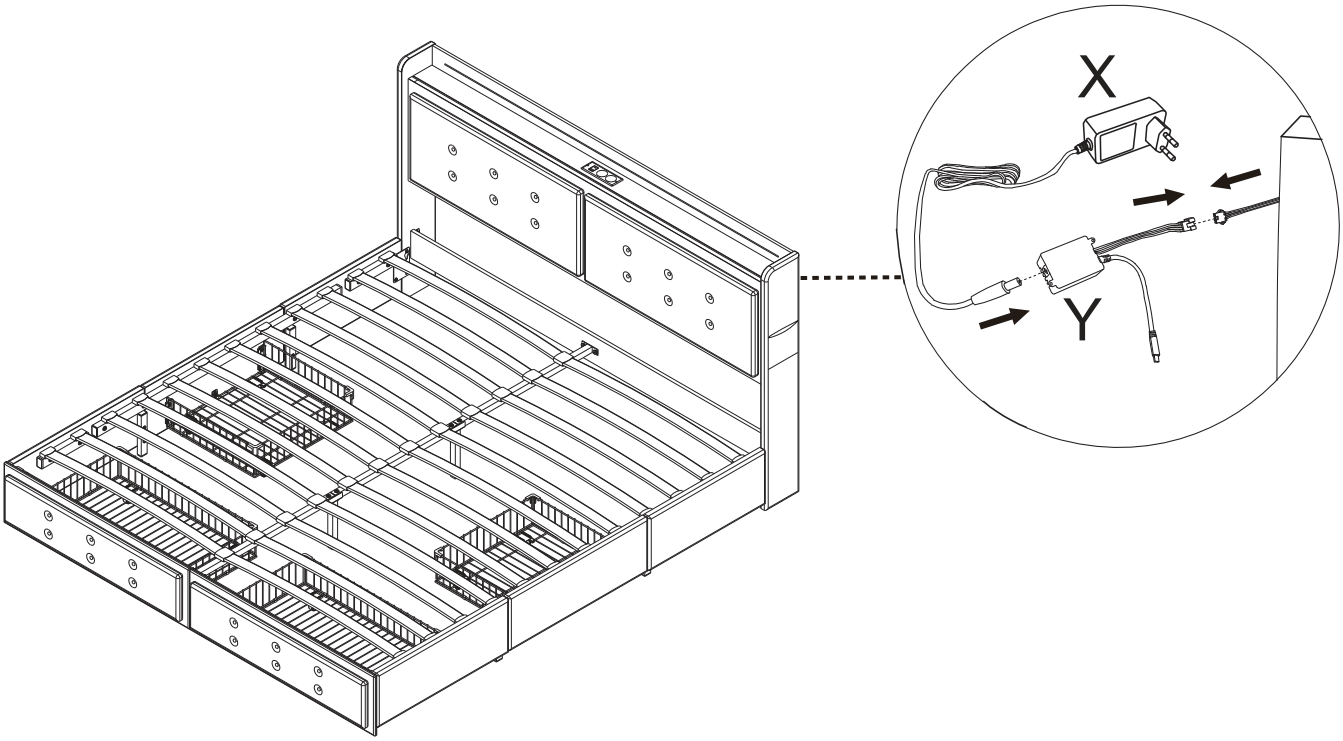

20

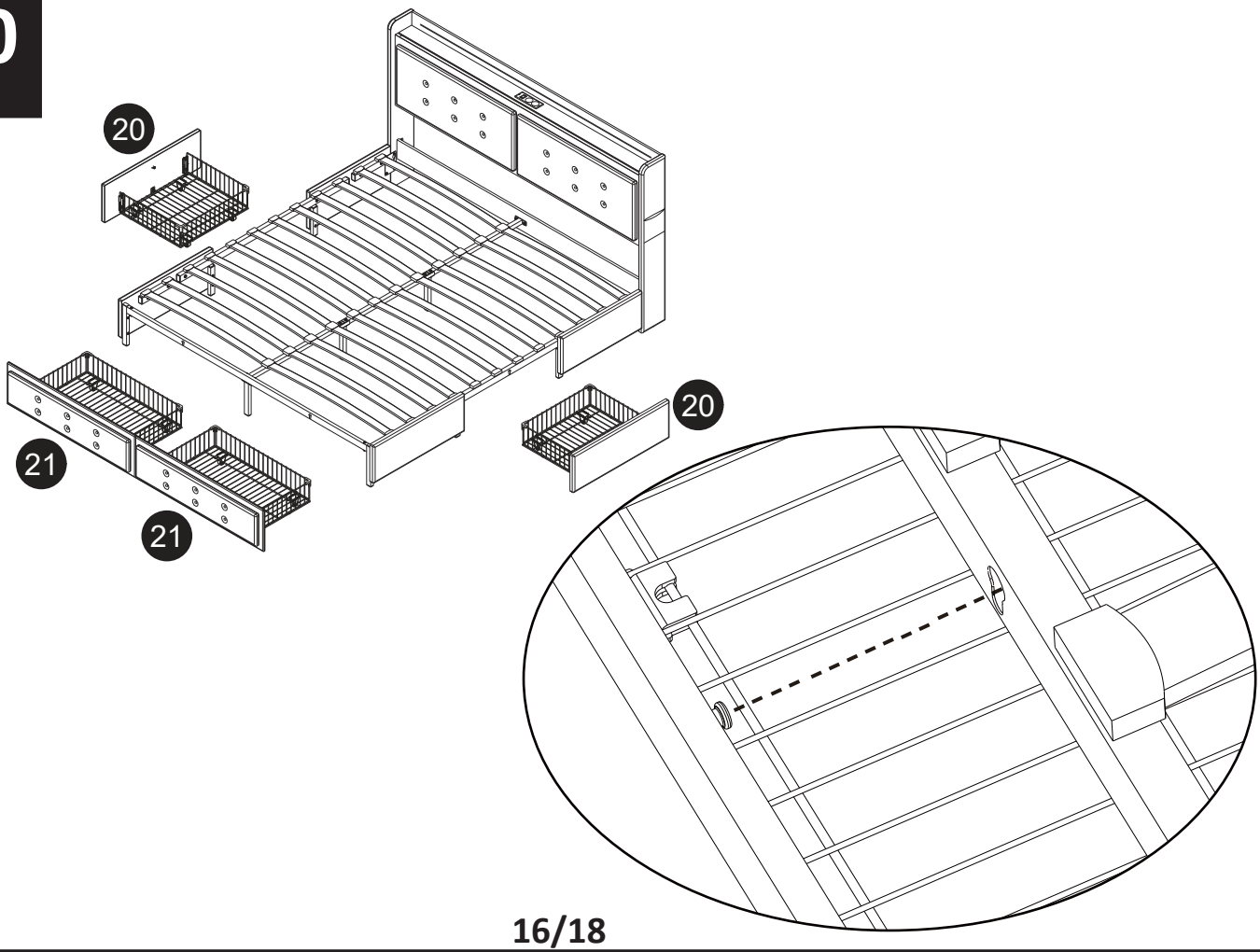

LED light

If you can't let the lights work successfully,please check the following:
1.Please check the direction of the connect,try it in the opposite direction,according to the following picture.
2.Please check the remote control,it need you to tear down the plastic septum before use it.
3.Don't let the remote control too far from the receiver,make sure there is no obstruction between them.
4.If one of the colors is not bright, please check whether the four wires in the plug are skewed, and move the main line to make the four wires flush.

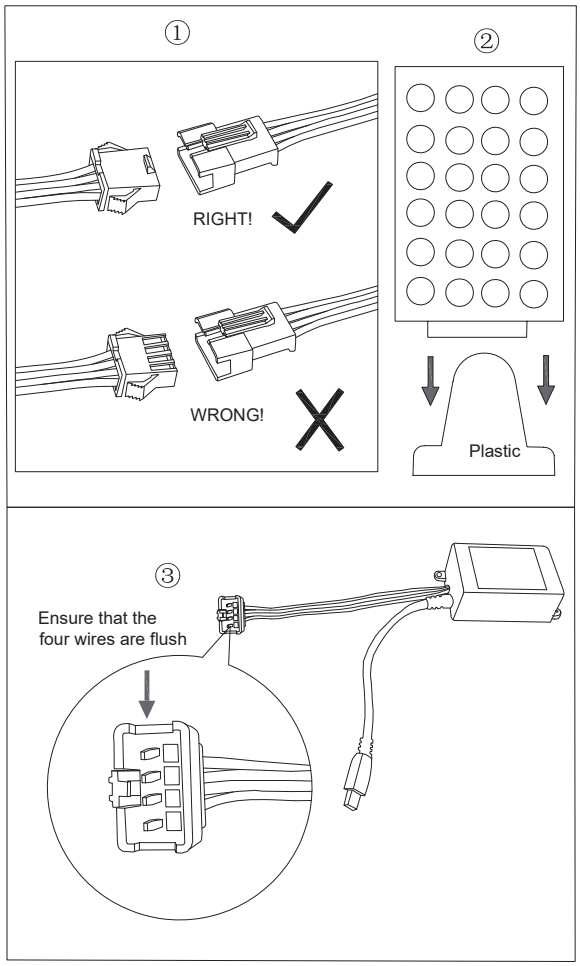

1 Please check the direction of the arrow
2 Please pull the plastic block out of the remote control
3 Please check whether the four wires of the plug are neat

Operation Instructions of Controller

Ⅰ.Specifications:

Working temperature：-20-60 ℃ Supply voltage: DC12V

Output:Three CMOS drain- open output Connecting Mode：Common anode

Max load current：2 A each color

Ⅱ.Control Method:
Adopt IR remoter to control the led controller, which has 24 buttons,the function of each button as the table below:

Brightness +(Speed up)	Brightness - (Speed down)	Off	On
Static red	Static green	Static blue	Static white
Static orange	Static pea green	Static dark blue	7 color jumpy change
Static dark yellow	Static cyan	Static brown	All fade out&fade in
Static yellow	Static light blue	Static pink	7 color fade change
Static straw yellow	Static sky blue	Static purple	3 base color jumpy

Ⅲ.Panel specification and connecting drawing as follows:

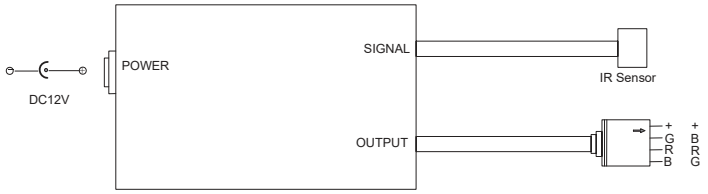

Ⅳ.Warning:

1.Supply voltage of this product is DC12V never connect to DC24V or AC220V.

2.Never connect two wires directly in case of short circuit.

3.Lead wire should be connected correctly according to colors that connecting diagram offers.

4.Warranty of this product is one year, in this period we guarantee replacement or repairing with no charge,but exclude the artificial situation of damaged or overload working.

⚠ WARNING

THIS PRODUCT CONTAINS A BUTTON BATTERY
If swallowed, a lithium button battery can cause severe or fatal injuries within 2 hours.
Keep batteries out of reach of children.
If you think batteries may have been swallowed or placed inside any part of the body, seek immediate medical attention.

CERTIFICATE OF CONFORMITY

Certificate No.: KEYS240524062001EM-02

Applicant	:	**Foshan Wei Guang Te Lighting Technology Co.,Ltd.**
Address	:	**No.177,Bai'an South Road,Cangmen community Jun'an Town, Shunde District,Foshan City,Guangdong Province.China**
Manufacturer	:	**Foshan Wei Guang Te Lighting Technology Co.,Ltd.**
Address	:	**No.177,Bai'an South Road,Cangmen community Jun'an Town, Shunde District,Foshan City,Guangdong Province.China**
Trade mark	:	**Wei Guang Te**
Product	:	**LED Light Bar**
Model No.	:	**WGT-A221116-12W,WGT-M2706-12W,WGT-M1808-12W, WGT-A250618-12W,WGT-A151010-12W,WGT-A221116-3W, WGT-A221116-5W,WGT-A221116-7W,WGT-A221116-9W, WGT-A221116-10W,WGT-M2706-3W,WGT-M2706-5W, WGT-M2706-7W,WGT-M2706-9W,WGT-M2706-10W,WGT-M1808-3W, WGT-M1808-5W,WGT-M1808-7W,WGT-M1808-9W,WGT-M1808-10W, WGT-A250618-3W,WGT-A250618-5W,WGT-A250618-7W, WGT-A250618-9W,WGT-A250618-10W,WGT-A250618-3W, WGT-A250618-5W,WGT-A250618-7W,WGT-A250618-9W, WGT-A250618-10W,WGT-A151010-3W,WGT-A151010-5W, WGT-A151010-7W,WGT-A151010-9W,WGT-A151010-10W**

The submitted sample of the above equipment has been tested and found to comply with the following European Directive:

EMC Directive - 2014/30/EU

The standard(s) used for showing compliance with the essential requirements:

Applicable Standard(s) **EN IEC 55015:2019+A11:2020**
EN IEC 61547:2023
EN IEC 61000-3-2:2019+A1:2021
EN 61000-3-3:2013+A1:2019+A2:2021

This certificate is part of the full test report(s) and should be read in conjunction with the test report: KEYS240524062001EM-02.
This certificate is based on an evaluation of one sample of above mentioned product. It does not imply assessment of the production of the product. Without the written approval of Guangdong KEYS Testing Technology Co., Ltd., this certificate is not permitted to be reproduced, except in full. It is not permitted to use the test lab's logo. The CE marking may only be used if all the relevant and effective European Directives are applicable.

CE

Jason Zhan
Manager
Date: May 31, 2024

Guangdong KEYS Testing Technology Co., Ltd.
Address: Building 1, No.18, Shihuan Road, Dongcheng Subdistrict, Dongguan, Guangdong, China
104, No.4, Fumin Street, Shilong, Dongguan, Guangdong, China
Tel:+ 86-0769-89798319 http://www.keys-lab.com E-mail: info@keys-lab.com

Certificate

Certificate Number: UNIA22051009EC-11

Product:	Power Adapter
Applicant:	Zhongshan Yabo Electronic Technology Co., Ltd. 4/f, 23 Kwong Lok Centre road, Lianfeng, Xiaolan, Zhongshan
Manufacturer:	Zhongshan Yabo Electronic Technology Co., Ltd. 4/f, 23 Kwong Lok Centre road, Lianfeng, Xiaolan, Zhongshan
Model No.:	YB-1236, YB-1224, YB-1212
Trade Name:	雅之博
Test Methods:	EN IEC 55015:2019/A11:2020 EN IEC 61000-3-2:2019/A1:2021 EN 61000-3-3:2013/A2:2021/AC:2022-01 EN 61547:2009

The laboratory tested the product provided by the applicant according to the above test methods. According to the test results, the product conforms to EMC Directive (2014/30/EU) issued by the European Commission. It is possible to use CE marking to demonstrate the compliance with EMC Directive.

The certificate applies to the tested sample above mentioned only and shall not imply an assessment of the whole production. It is only valid in connection with the test report number: UNIA22051009ER-11.

May 25, 2022
Issue Date

Hoffer Lau

CE

Shenzhen United Testing Technology Co., Ltd.
Shenzhen:2/F.,Annex Building,Jiahuangyuan Tech Park, No.3-5, Baoyuan 1st Road,Fuyong Xixiang Street, Bao'anDistrict, Shenzhen, Guangdong, China/518050
Guangzhou:No.47-3, Industrial Road, Zhushan, Dalong Street, Panyu District, Guangzhou, Guangdong, China/511450
Tel:+86-755-86180996/+86-020-39277769 Fax:+86- 0755-86180156
Web.Site: www.uni-lab.hk/ E-mail:hofferlau@uni-lab.hk

Certificate of Compliance

CE

CERTIFICATE OF CONFORMITY

Electromagnetic Compatibility (EMC) Directive 2014/30/EU

This Certificate of Conformity is hereby issued to the product designated below:

Certificate No.	23EP08001E01
Report No.	EP2308001E01
Date Issue.	2023-08-23
Applicant's name	Shenzhen MingFuXin Furniture Electrical Appliances Co., Ltd.
Address	4 F, building a, No. 8, Chenwu Road, Dakang community, Yuanshan street, Longgang District, Shenzhen
Manufacturer's name	Shenzhen MingFuXin Furniture Electrical Appliances Co., Ltd.
Address	4 F, building a, No. 8, Chenwu Road, Dakang community, Yuanshan street, Longgang District, Shenzhen
Product Description	Socket
Model(s)/Type References	OAZ-XXXX(The 1st "X" represents the switch, 0-1, the 2nd "X" represents the number of sockets 1-4, the 3th "X" represents the number of USB 1-3 (1 is double A, 2 is A+C,3 is double C), and the 4th "X" represents the wireless charge 0-1)
Parameters	See attachment for details
Standard(s)	EN 55032:2015+A11:2020+A1:2020 EN 55035:2017+A11:2020 EN IEC 61000-3-2:2019+A1:2021 EN 61000-3-3:2013+A1:2019+A2:2021

On the basis of the referenced test report(s), sample(s) tested of the above product have been found to comply with the standards harmonized with the directives listed on this verification at the time the tests were carried out. Other standards and Directives may be relevant to the product. This verification is part of the full test report(s) and should be read in conjunction with it(them).
Once compliance with all product relevant CE mark directives are verified, including any relevant e.g. risk assessment and production control, the manufacturer may indicate compliance by signing a Declaration of Conformity themselves and applying the mark to products identical to the tested sample(s).

Approved By

Eric Liu
Director of engineering department

Dongguan Pubiao Testing Technology Co., Ltd
No. 3, 1/F., Building A, No.30, Minghua Road, Juzhou, Shijie, Dongguan, Guangdong, China
Tel: +86 769 81813516 E-mail: service@pubiaotest.com Web: www.pubiaotest.com

CE

CERTIFICATE OF CONFORMITY

Electromagnetic Compatibility (EMC) Directive 2014/30/EU

Appendix of Certificate No.: 23EP08001E01

Parameters:

Input: 220-250Vac, 50Hz, 10A
Output: AC socket: 2500W max
1)For USBA+Type-C output:
Type-C: 5VDC3A/9VDC2.22A/12VDC1.67A
USBA:5VDC3A/9VDC2A/12VDC1.5A
Type-C&USB: 5VDC/3A
Wireless:15W max
2)For double C output:
Type-C1: 5VDC3A/9VDC2.22A/12VDC1.67A
Type-C2:5VDC3A/9VDC2A/12VDC1.5A
Type-C1&Type-C2: 5VDC/3A
Wireless:15W max
3)For double A output:
USBA1:5VDC 2.1A
USBA2:5VDC 2.1A
USBA1&USBA2:5VDC/2.1A
Wireless:15W max

Dongguan Pubiao Testing Technology Co., Ltd
No. 3, 1/F., Building A, No.30, Minghua Road, Juzhou, Shijie, Dongguan, Guangdong, China
Tel: +86 769 81813516 E-mail: service@pubiaotest.com Web: www.pubiaotest.com

EN:Battery Safety Instructions

1.Do not dispose of used button batteries or remote controls in household trash. To protect the environment and prevent hazardous leakage, please follow these guidelines:

2.Remove button batteries after use and take them to a local battery recycling point or hazardous waste collection site.

3.Do not burn or dismantle the batteries to avoid explosion or toxic release.

4.Ifthe remote control is no longer in use, please deliver itto a certified electronics recycling facility to promote resource reuse.

5.Keep out of reach of children to prevent accidental ingestion or injury.

6.This product does notinclude batteries; please purchase them separately. The compatible button cell model for the remote control is CR2025 3V

7.Ifthe light strip is not working, please try replacing the battery first . Ifthe issue persists, contactthe seller for assistance.

8.**Keep the remote control away from children — keep it away from children!** Ifthe battery is accidentally swallowed, seek medical attention immediately.

DE:Batteriesicherheitshinweise

1. Entsorgen Sie gebrauchte Knopfzellen oder Fernbedienungen nichtim Hausmüll. Um die Umwelt zu schützen und gefährliche Leckagen zu vermeiden, beachten Sie bitte die folgenden Hinweise:
2. Entfernen Sie die Knopfzelle nach dem Gebrauch und bringen Sie sie zu einer örtlichen Batteriesammelstelle oder einem Sondermüllentsorgungszentrum.
3. Batterien nicht verbrennen oder zerlegen, um Explosionen oder die Freisetzung giftiger Stoffe zu vermeiden.
4. Wenn die Fernbedienung nicht mehr verwendet wird, bringen Sie sie zu einer zertifizierten Elektronik-Recyclingstelle, um eine Wiederverwertung zu ermöglichen.

5. Außerhalb der Reichweite von Kindern aufbewahren, um versehentliches Verschlucken oder Verletzungen zu verhindern.

6.Dieses Produkt enthält keine Batterien. Bitte kaufen Sie diese separat. Das kompatible Knopfzellenmodell für die Fernbedienung ist CR2025 3V

7.Wenn der Lichtstreifen nichtfunktioniert, versuchen Sie zunächst, die Batterie zu wechseln. Besteht das Problem weiterhin, kontaktieren Sie bitte den Verkäufer.

8.**Halten Sie die Fernbedienung unbedingt von Kindern fern — unbedingtfernhalten!** Wird die Batterie versehentlich verschluckt, suchen Sie sofort medizinische Hilfe auf.

FR:Instructions de sécurité pour les piles

1. Ne jetez pas les piles bouton usagées ou les télécommandes à la poubelle ménagère. Pour protéger l ’ environnement et éviter tout risque de fuite dangereuse, veuillez suivre les consignes suivantes :
2. Retirez les piles bouton après usage et déposez-les dans un point de collecte local ou un centre de déchets dangereux.
3. Ne brûlez pas et ne démontez pas les piles, cela pourrait entraîner une explosion ou libérer des substances toxiques.
4. Si la télécommande n’est plus utilisée, déposez-la dans un centre de recyclage agréé pour appareils électroniques, afin de favoriser la réutilisation des ressources.
5. Gardez hors de portée des enfants pour éviter tout risque d’ingestion accidentelle ou de blessure.

6.Ce produit ne contient pas de pile. Veuillez l’acheter séparément. Le modèle de pile bouton compatible pour la télécommande est CR2025 3V

7.Si le ruban LED ne fonctionne pas, essayez d’abord de remplacer la pile. Si le problème persiste, contactez le vendeur.

8.**Tenez la télécommande éloignée des enfants — éloignez-la vraiment !** En cas d’ingestion accidentelle de la pile, consultez immédiatement un médecin.

1

2

3

4

5

6

7

Modell : CR2025 3.V

8

9

10