Installation sanleitung
Installation Instruction
Instruction d'installation

SKU:N623P456696

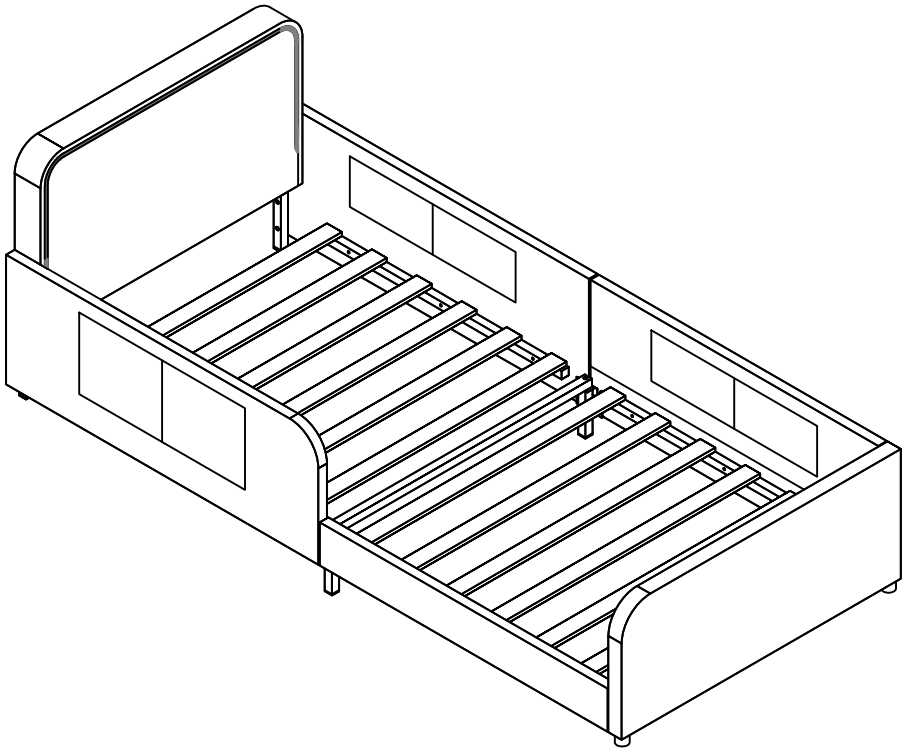

English

IMPORTANT ! KEEP FOR FUTURE REFERENCE : READ CAREFULLY

- To be assembled by an adult. Assembly must be checked by an adult before use
- WARNING ! Keep all screws, small parts and plastic bags out of the reach of children
- Properly identify all parts before assembling
- Never use your item if any of its parts are broken or missing
- Should any problems arise, please contact our After Sales Service
- Manufacturer's instructions shall be followed at all times
- Care: Clean with a soft, dry cloth. In case of larger stains, carefully rub with a slightly damp, non-abrasive sponge
- Avoid the risk of fire by not placing furniture near sources of ignition or hot items
- Do not jump on the bed

Deutsch

WICHTIG ! ZUM SPÄTEREN NACHSCHLAGEN AUFBEWAHREN: SORGFÄLTIG LESEN

- Muss von einem Erwachsenen zusammengebaut werden.Der Zusammenbau muss vor dem Gebrauch von einem Erwachsenen überprüft werden
- WARNUNG! Bewahren Sie alle Schrauben, Kleinteile und Plastikbeutel außerhalb der Reichweite von Kindern auf
- Kennzeichnen Sie vor dem Zusammenbau alle Teile richtig
- Benutzen Sie Ihren Artikel niemals, wenn Teile gebrochen sind oder fehlen
- Sollten Probleme auftreten, wenden Sie sich bitte an unseren Kundendienst
- Die Anweisungen des Herstellers sind stets zu befolgen
- Pflege: Mit einem weichen, trockenen Tuch reinigen. Bei größeren Flecken vorsichtig mit einem leicht feuchten, nicht scheuernden Schwamm abreiben. nicht scheuernden Schwamm
- Vermeiden Sie die Gefahr eines Brandes, indem Sie die Möbel nicht in der Nähe von Zündquellen oder heißen Gegenständen aufstellen
- Nicht auf das Bett springen

Français

IMPORTANT ! CONSERVER POUR RÉFÉRENCE ULTÉRIEURE : LIRE ATTENTIVEMENT

- Le montage doit être effectué par un adulte. Le montage doit être vérifié par un adulte avant Utilisation
- ATTENTION ! Tenir les vis, les petites pièces et les sachets en plastique hors de portée des enfants
- Identifiez correctement toutes les pièces avant de les assembler
- N'utilisez jamais votre article si l'une de ses pièces est cassée ou manquante
- En cas de problème, veuillez contacter notre service après-vente
- Les instructions du fabricant doivent être respectées à tout moment
- Entretien : nettoyer avec un chiffon doux et sec. En cas de taches plus importantes, frotter soigneusement avec une éponge non abrasive légèrement humide. légèrement humide et non Abrasive
- Évitez les risques d'incendie en ne plaçant pas les meubles à proximité de sources d'inflammation ou d'objets chauds
- Ne pas sauter sur le lit

Italiano

IMPORTANTE! CONSERVARE PER RIFERIMENTO FUTURO: LEGGERE ATTENTAMENTE

- Deve essere assemblato da un adulto. L'assemblaggio deve essere controllato da un adulto prima dell'uso
- ATTENZIONE! Tenere tutte le viti, le piccole parti e i sacchetti di plastica fuori dalla portata dei bambini
- Identificare correttamente tutte le parti prima dell'assemblaggio
- Non utilizzare mai l'articolo se alcune parti sono rotte o mancanti
- In caso di problemi, si prega di contattare il nostro Servizio Post Vendita
- Le istruzioni del produttore devono essere sempre seguite
- Cura: Pulire con un panno morbido e asciutto. In caso di macchie più estese, strofinare accuratamente con una spugna leggermente umida e nonspugna leggermente umida e non abrasiva
- Evitare il rischio di incendio, non collocando i mobili vicino a fonti di accensione o a oggetti caldi
- Non saltare sul letto

Español

¡ IMPORTANTE ! CONSÉRVELO PARA FUTURAS CONSULTAS: LEA ATENTAMENTE

- Debe ser montado por un adulto. El montaje debe ser comprobado por un adulto antes del uso

ADVERTENCIA Mantenga todos los tornillos, piezas pequeñas y bolsas de plástico fuera del alcance de los niños.

- Identifique correctamente todas las piezas antes de montarlas
- Nunca utilice su artículo si alguna de sus piezas está rota o falta
- Si surge algún problema, póngase en contacto con nuestro Servicio Postventa
- Las instrucciones del fabricante deben seguirse en todo momento
- Cuidado: Limpiar con un paño suave y seco. En caso de manchas más grandes, frote cuidadosamente con una esponja no abrasiva ligeramente humedecida.
- Evite el riesgo de incendio no colocando los muebles cerca de fuentes de ignición u objetos calientes.
- No saltar sobre la cama.

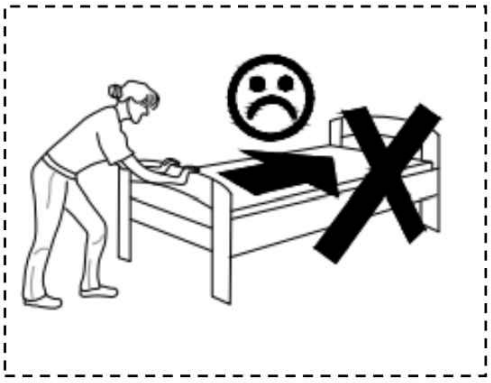

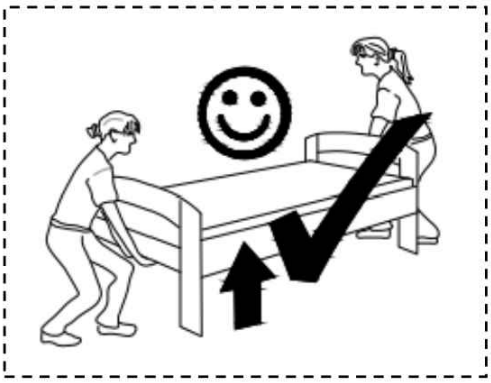

Detail View

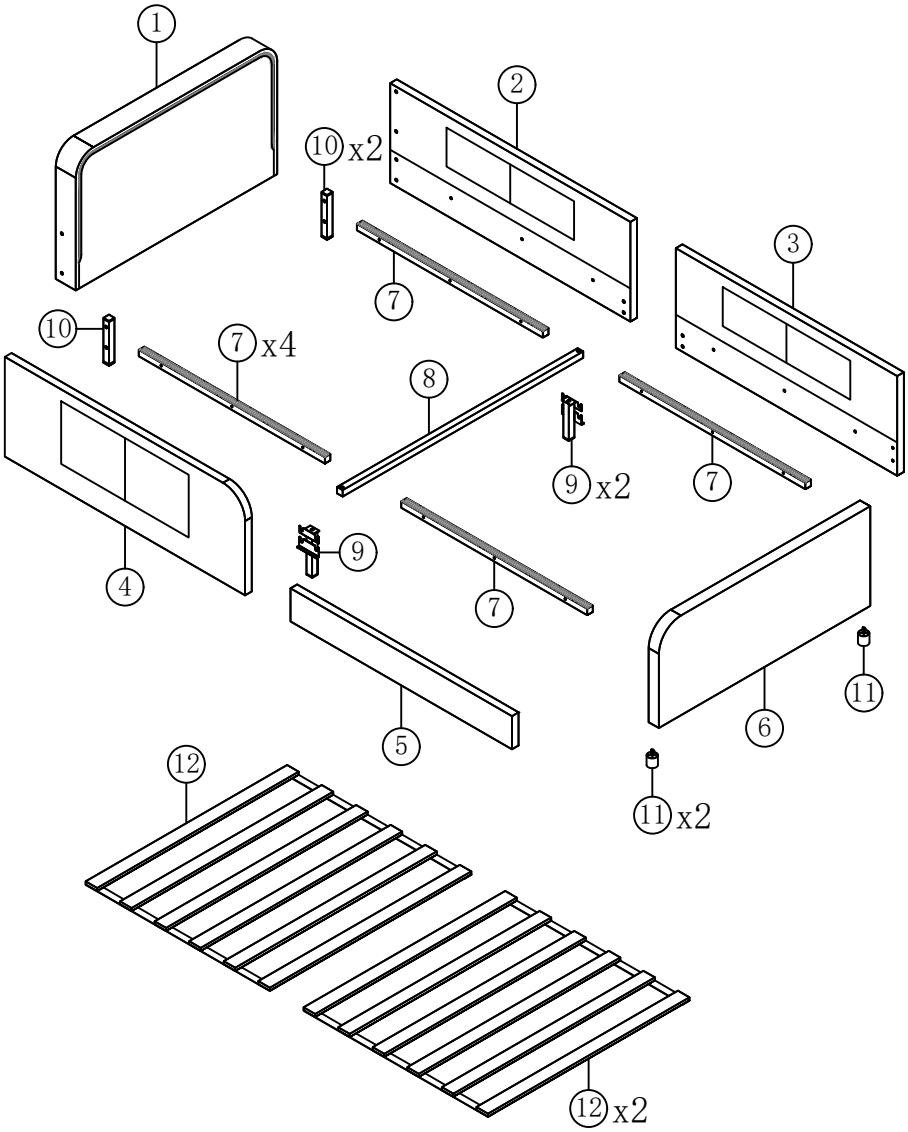

Part List

N623P456696

① x1 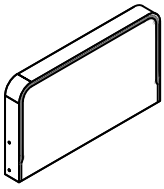 Head board	② x1 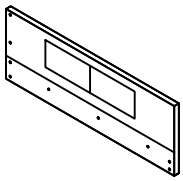 Side rail	③ x1 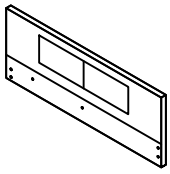 Side rail
④ x1 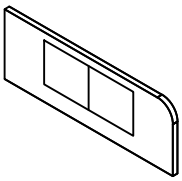 Side rail	⑤ x1 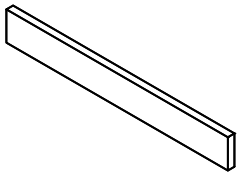 Side rail	⑥ x1 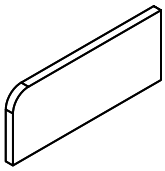 Foot board
⑦ x4 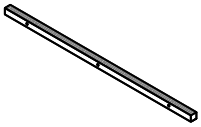 Side rails support bar	⑧ x1 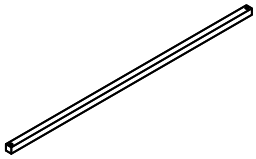 Cross bar	⑨ x2 Side rails Support legs
⑩ x2 Square pipe	⑪ x2 Bed legs	⑫ x2 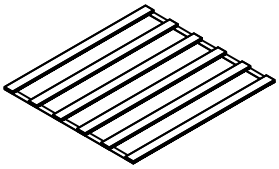 Slats

Hardware list

N623P456696

Ax1 Allen Key	Bx18 M8x16mm Bolts	Cx22 M8x40mm Bolts
Dx4 Washer	Ex1 Two hole iron	Fx2 "7" Connector
Gx1 Color controller	Hx1 Power adapter	

DE:Bitte beachten Sie, dass die Formen der Schrauben B und C ähnlich sind. Bitte installieren Sie entsprechend der Anleitung und unterscheiden Sie sie!
UK:Please note that the shapes of screws B and C are similar. Please install according to the instructions and distinguish them!
FR:Notez que les vis B et C ont des formes similaires. Veuillez les installer en suivant les instructions pour les séparer!

DE:Vor dem Einbau die Schrauben in die Löcher stecken und festziehen, aber nicht bis 100%, 70% bis 80% anziehen reicht aus. Schließlich, nachdem alle Schrauben installiert sind, ziehen Sie alle Schrauben auf 100 %.

Wenn Sie auf diese Probleme stoßen, wie z. B. Fehlausrichtung der Löcher oder Unfähigkeit, bestimmte Teile zu installieren, überprüfen Sie bitte, ob die Schrauben korrekt verwendet werden und passen Sie die Dichtigkeit der Schrauben an.

UK:Before installation, insert the screws into the holes and tighten them, but do not tighten them to 100%, 70% to 80% is sufficient. Finally, after all screws are installed, tighten all screws to 100%.

If you encounter these issues, such as if the holes cannot be aligned or some parts cannot be installed, please check if the screws are used correctly and adjust the tightness of the screws.

FR:Insérer la vis dans le trou avant la fin de l'assemblage, serrer la vis, mais ne pas serrer à 100%, 70% ~ 80% est correct. Enfin, une fois que toutes les vis sont bien serrées, toutes les vis sont serrées à 100%.

Si vous rencontrez ces problèmes, par exemple si les trous ne sont pas alignés ou si certaines pièces ne peuvent pas être montées, vérifiez que les vis sont utilisées correctement et Ajustez leur serrage.

Attention: Do not tighten the screws before completing the entire installation. If you have any difficulty with the installation process, please feel free to contact us.
Achtung: Ziehen Sie die Schrauben erst fest, wenn die gesamte Installation abgeschlossen ist. Wenn Sie beim Installationsvorgang Schwierigkeiten haben, können Sie sich gerne an uns wenden.
Attention : Ne serrez pas les vis avant d'avoir terminé l'installation. Si vous rencontrez des difficultés lors du processus d'installation, n'hésitez pas à nous contacter.

Step1:

Fix the Side rails Support legs ⑨ to the Side rail ②, ③, ④ and ⑤ with Bolts B by using Allen key A.

Befestigen Sie die Stützbeine ⑨ der Seitenbalken ②,③,④ und ⑤ mit den Bolzen B mithilfe des Allen-Schlüssels A.

Fixez les jambes de support ⑨ des rails latéraux ②,③,④ et ⑤ au rail latéral ⑤ à l'aide des boulons B et de la clé à écrou A.

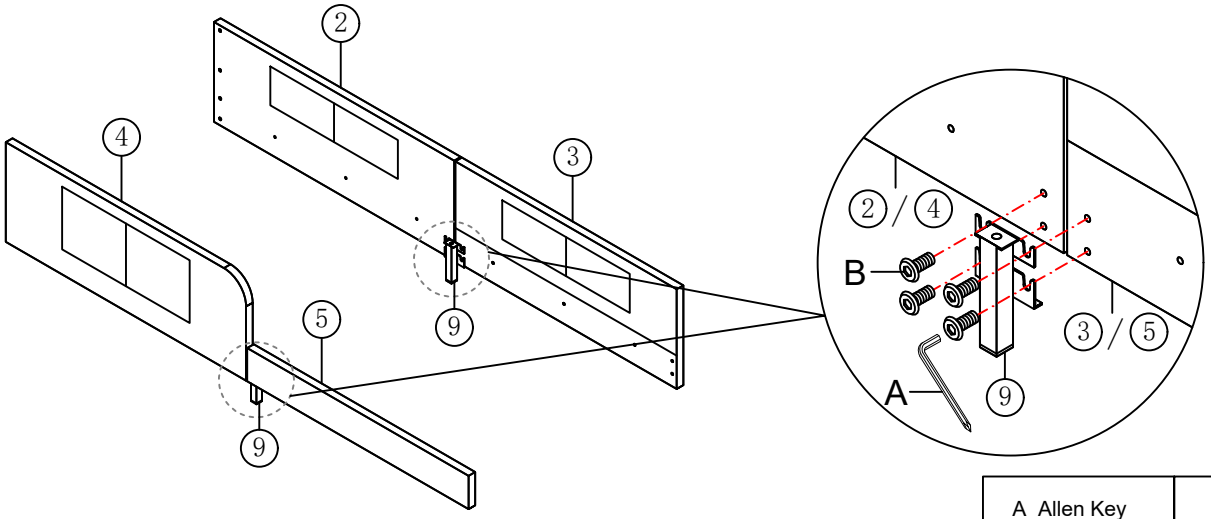

A Allen Key	B Bolts x 8
	M8x16mm

Step2:

Fix the Two hole iron E to the Side rail ② and ③ with Bolts B by using Allen key A.

Befestigen Sie den Eisenstift mit zwei Bohrungen E mit den Bolzen B an den Seitenstangen ② und ③ mithilfe des Allen-Schlüssels A.

Fixez l'iron E à deux trous aux rails latéraux ② et ③ à l'aide des boulons B et de la clé à écrou A.

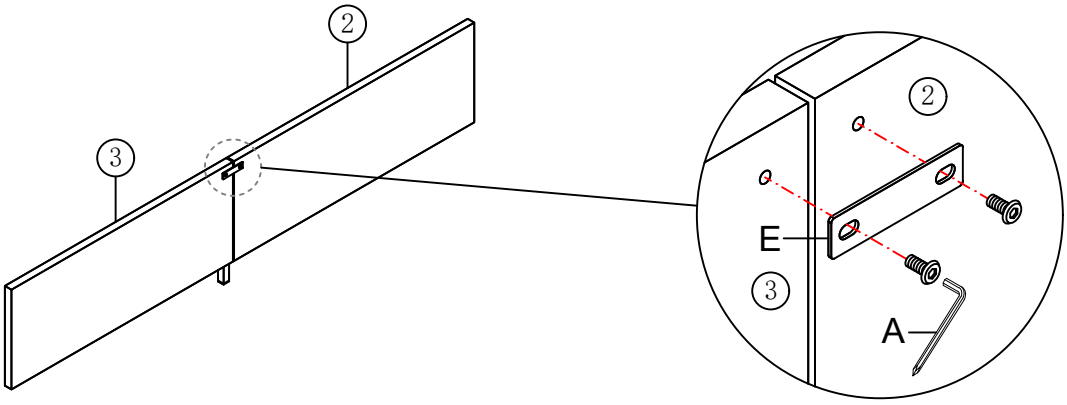

A Allen Key	B Bolts x 2	E Two hole iron x 1
	M8x16mm	

Step 3

Fix the Square pipe ⑩ to the Side rail ② and ④ with Bolts C by using Allen key A.

Befestigen Sie die quadratische Rohrleitung ⑩ mit den Bolzen C an den Seitenbalken ② und ④ mithilfe des Allen-Schlüssels A.

Fixez le tuyau carré ⑩ aux rails latéraux ② et ④ à l'aide des boulons C et de la clé à écrou A.

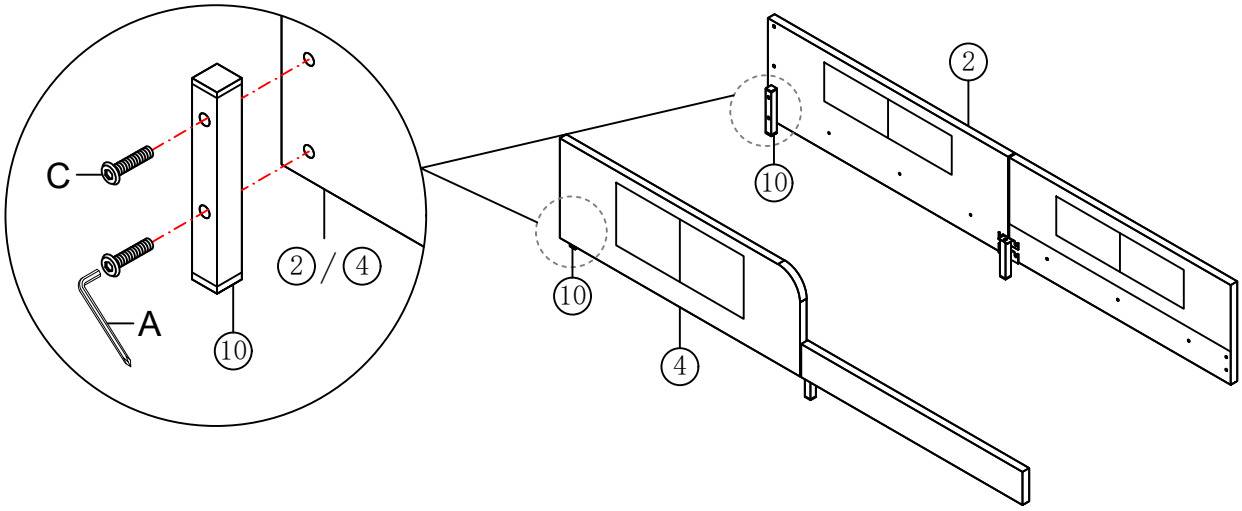

A Allen Key	C Bolts x 4
	M8x40mm

Step 4

Fix the Head board ① to the Side rail ② and ④ with Bolts C and Washer D by using Allen key A.

Befestigen Sie die Kopfplatte ① an den Seitenbalken ② und ④ mit den Bolzen C und der Schraubenscheibe D mithilfe des Allen-Schlüssels A.

Fixez le plateau de tête ① aux rails latéraux ② et ④ à l'aide des boulons C et des rondelles D, en utilisant la clé à écrou A.

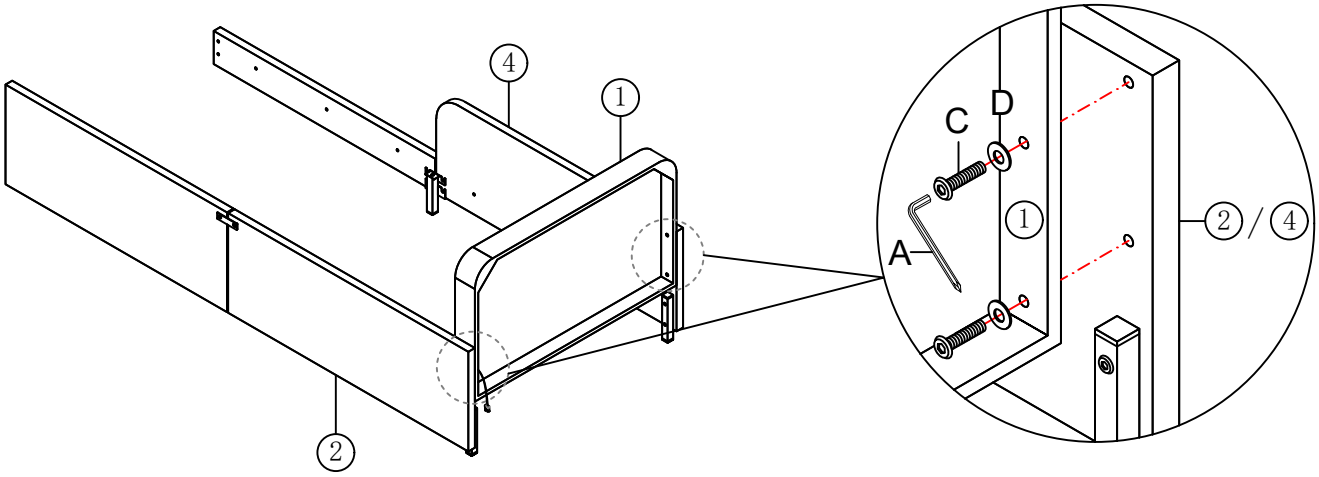

A Allen Key	C Bolts x 4	D Washer x 4
	M8x40mm	

Step 5

Fix the Bed legs ⑪ to the Foot board ⑥.
Befestigen Sie die Bettbeine ⑪ am Fußbrett ⑥.
Fixez les jambes du lit ⑪ au plateau de pied ⑥.

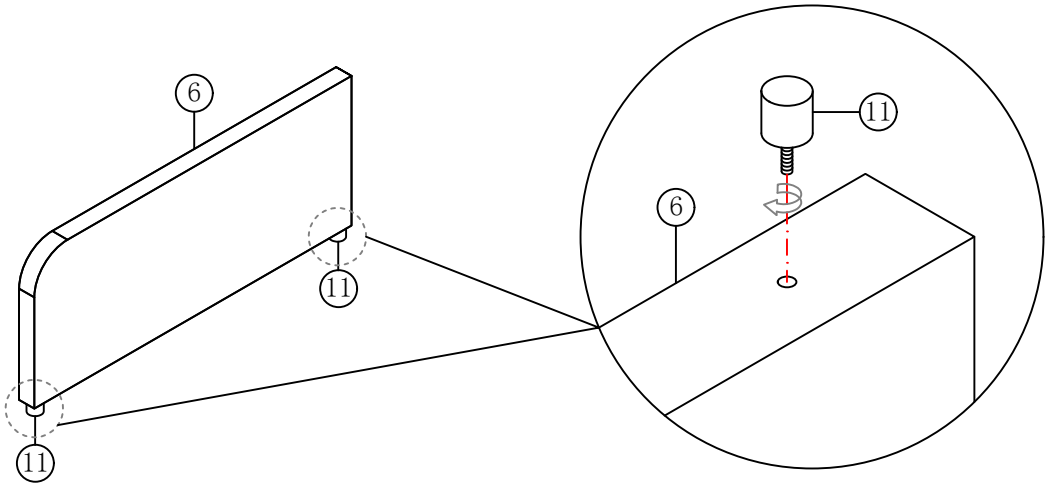

Step 6

Fix the Foot board ⑥ to the Side rail ③ and ⑤ with Bolts B and "7" Connector F by using Allen key A.
Befestigen Sie die Fußplatte ⑥ an den Seitenbalken ③ und ⑤ mit den Bolzen B sowie dem "7"-Stecker F mithilfe des Allen-Schlüssels A.
Fixez la planche de pied ⑥ aux rails latéraux ③ et ⑤ à l'aide des boulons B et du connecteur "7" F, en utilisant la clé à écrou A.

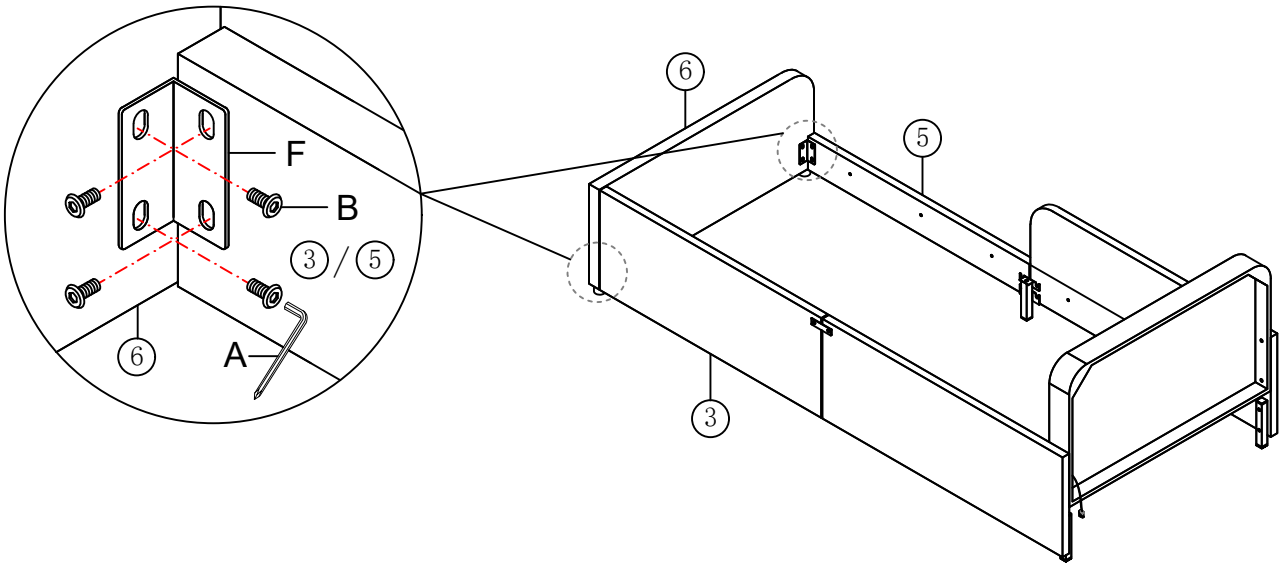

A Allen Key	B Bolts x 8	F "7" Connector x 2
	M8x16mm	

Step 7

Fix the Side rails support bar ⑦ to the Side rail ②, ③, ④ and ⑤ with Bolts C by using Allen key A.

Befestigen Sie die Seitenbalkenstützstange ⑦ mit den Bolzen C an den Seitenbalken ②, ③, ④ und ⑤ mithilfe des Allen-Schlüssels A.

Fixez la barre de support du rail latéral ⑦ au rail latéral ②,③,④ et ⑤ à l'aide des boulons C et de la clé à écrou A.

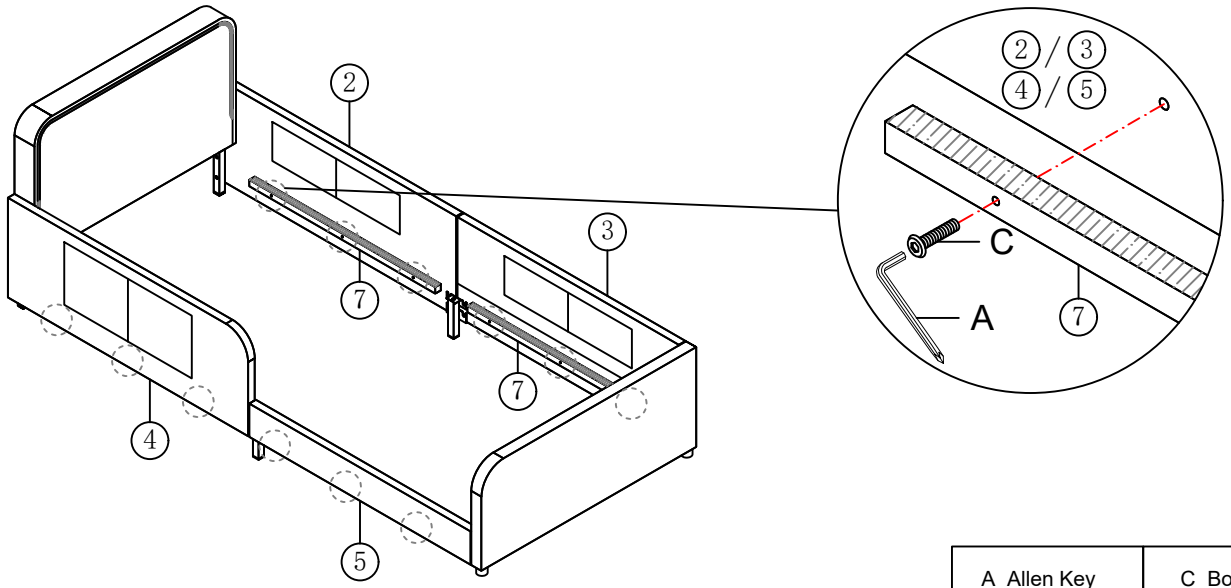

A Allen Key	C Bolts x 12
	M8x40mm

Step 8

Fix the Cross bar ⑧ to the Side rails Support legs ⑨ with Bolts C by using Allen key A.

Befestigen Sie die Kreuzstange ⑧ mit den Bolzen C an den Seitenbalkenstützbeinen ⑨ unter Verwendung der Allen-Schlüssel A.

Fixez la barre de croix ⑧ aux jambes de soutien des rails latéraux ⑨ à l'aide des boulons C et de la clé à écrou A.

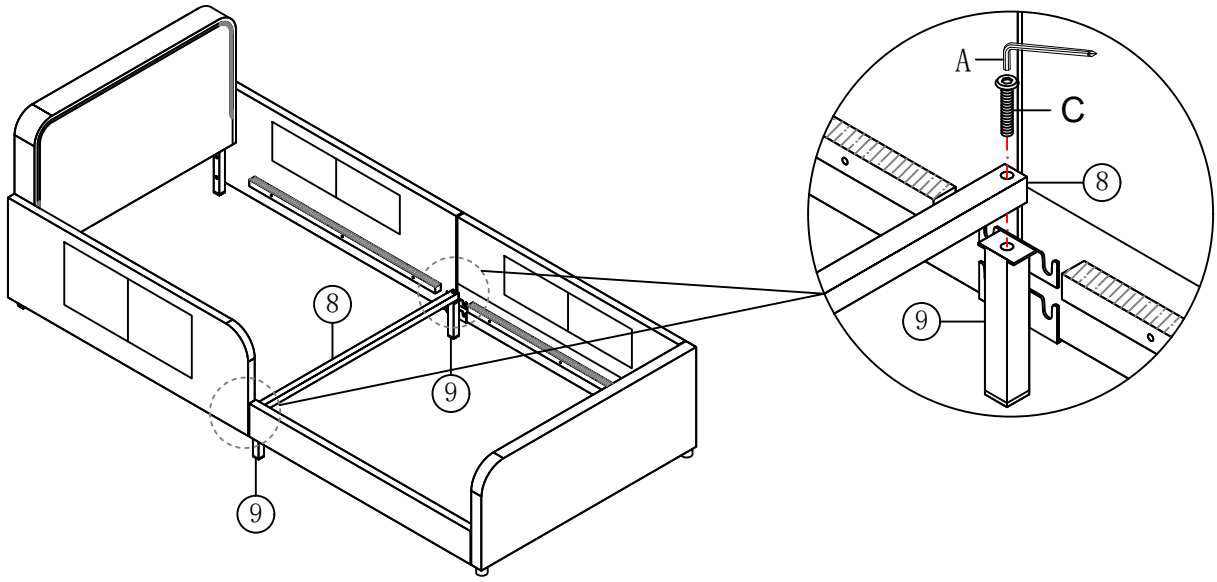

A Allen Key	C Bolts x 2
	M8x40mm

Step 9

Fix the Slats ⑫ to the Side rail Support Bar ⑦.

Befestigen Sie die Schienen ⑫ an die Seitenstützstange ⑦.

Fixez les lames ⑫ au support de la barre latérale ⑦.

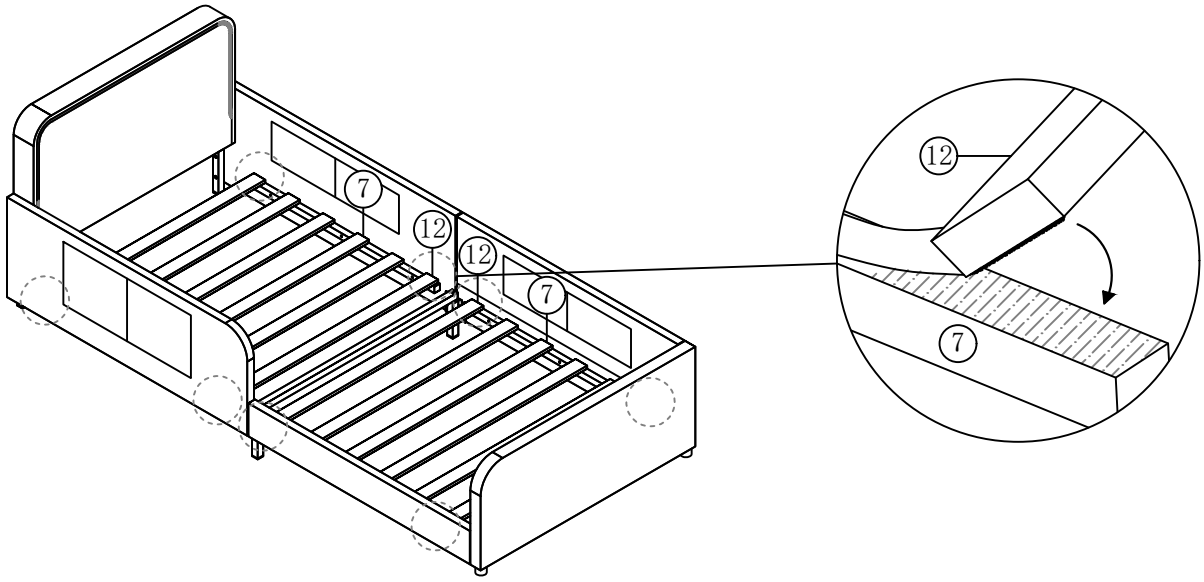

Step 10

Put the Color controller G to the light line ,please notice that →←.Fix the Power adapter H to the Color controller G,Finally connect the power.

Legen Sie den Farbcontroller G auf die Lichtlinie – achten Sie bitte auf →←.Befestigen Sie den Stromadapter H am Farbcontroller G und schließen Sie anschließend die Stromversorgung an.

Placez le contrôleur de couleur G sur la ligne lumineuse, veuillez noter →←.Fixez l'adaptateur d'alimentation H au contrôleur couleur G, puis connectez l'alimentation.

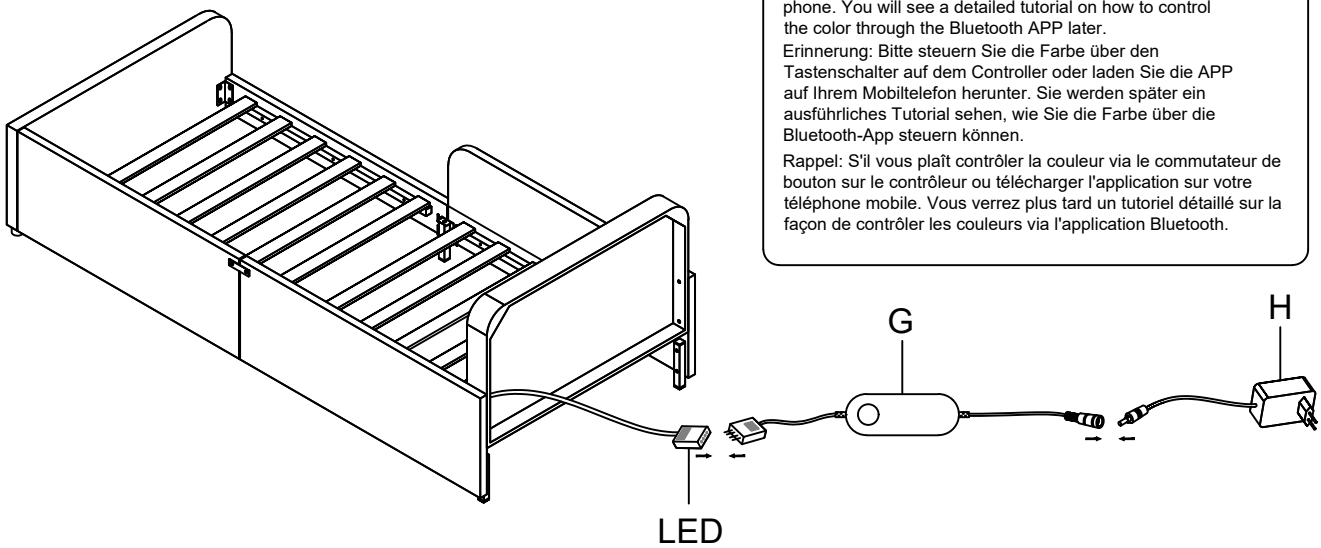

Reminder: Please control the color through the button switch on the controller or download the APP on your phone. You will see a detailed tutorial on how to control the color through the Bluetooth APP later.

Erinnerung: Bitte steuern Sie die Farbe über den Tastenschalter auf dem Controller oder laden Sie die APP auf Ihrem Mobiltelefon herunter. Sie werden später ein ausführliches Tutorial sehen, wie Sie die Farbe über die Bluetooth-App steuern können.

Rappel: S'il vous plaît contrôler la couleur via le commutateur de bouton sur le contrôleur ou télécharger l'application sur votre téléphone mobile. Vous verrez plus tard un tutoriel détaillé sur la façon de contrôler les couleurs via l'application Bluetooth.

G Color controller x 1	H Power adapter x 1

Step 11

Every thing is finished now,please enjoy your bed.
Jetzt ist alles vorbei, bitte genießen Sie Ihr Bett.
Tout est fini maintenant, profite de ton lit.

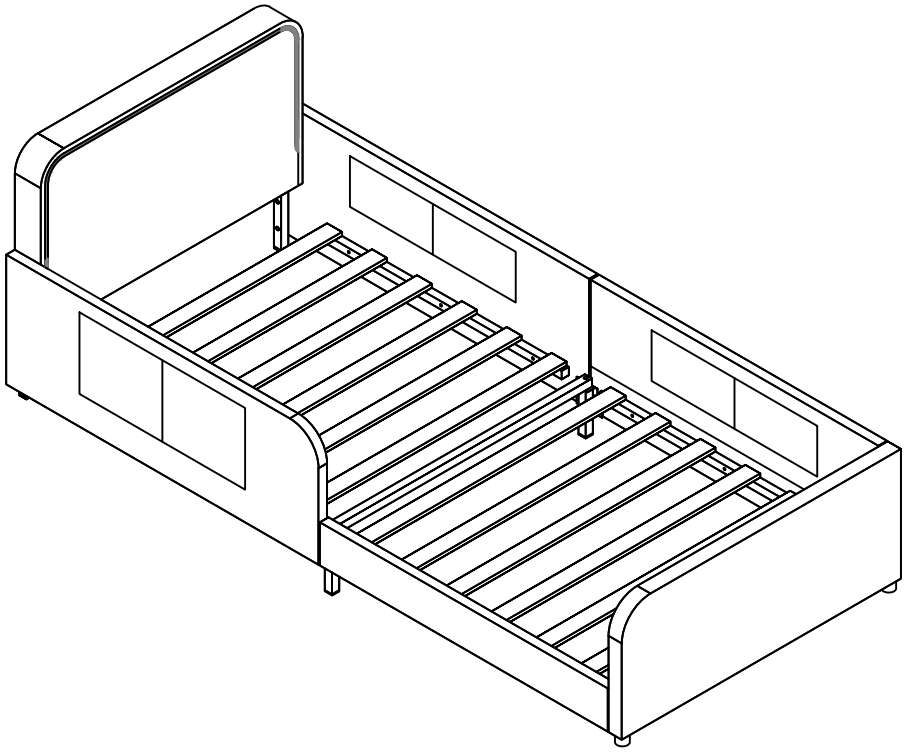

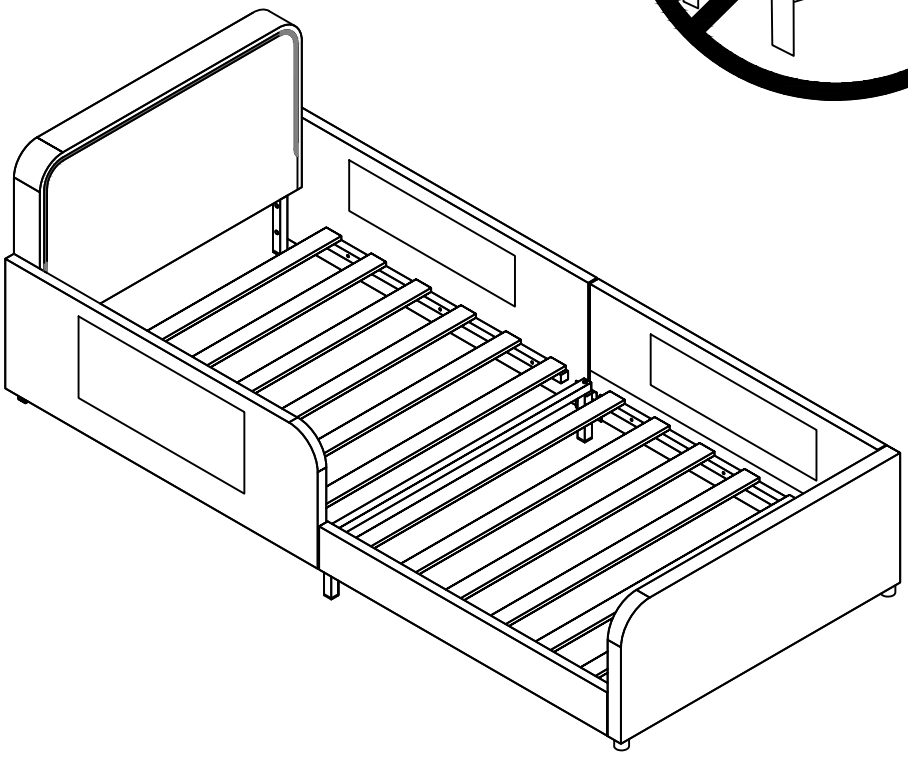

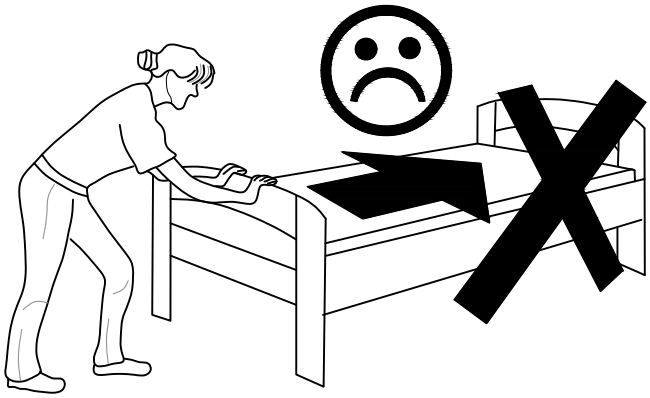

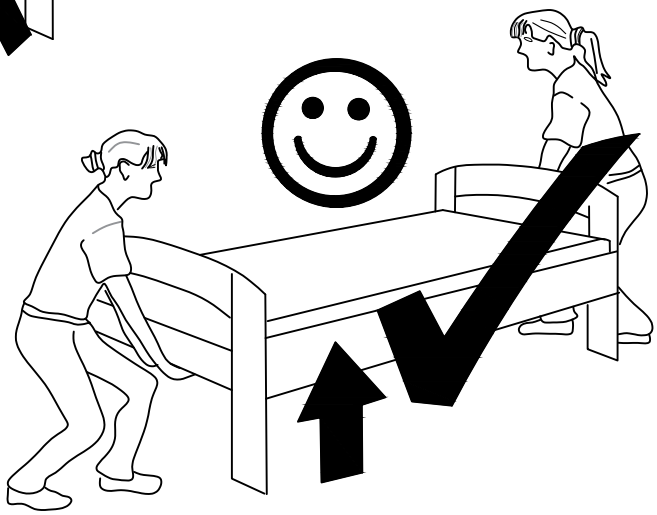

LED Bluetooth controller Features
Caractéristiques du contrôleur Bluetooth LED
LED Bluetooth Controller Eigenschaften

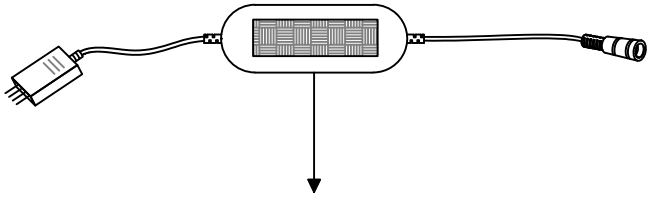

NOTICE:
Please scan the QR code to download the APP to control the color of the light strip.
Please refer to the following instructions for details.
Bitte scannen Sie den QR-Code, um die APP herunterzuladen, um die Farbe des Einzelheiten entnehmen Sie bitte der folgenden Anleitung.
Veuillez scanner le code QR pour télécharger l'application pour contrôler la couleur de la bande lumineuse.
Veuillez consulter les instructions ci-dessous pour plus de détails.

Click to show the lamp list
Cliquez pour afficher la liste des lumières
Klicken Sie, um die Liste der Lichter anzuzeigen

Switch the color wheel
Basculer la roue des couleurs
Farbrad wechseln

Display the RGB value Click to manual
Afficher les valeurs RVB Cliquez pour manuellement
RGB-Werte anzeigen Klicken Sie manuell

Adjustment view
Ajuster la vue
Ansicht anpassen

Click to shift the interface
Cliquez sur l'interface mobileAnsicht
Klicken Sie, um die Schnittstelle zu wechseln

Click to display setting view
Cliquez pour afficher la vue des paramètres
Klicken Sie, um die Einstellungsansicht anzuzeigen

Lamp switch button
Bouton interrupteur lumière
Taste für Lichtschalter

Adjust the color
Ajuster la couleur
Farbe anpassen

Click square icon to
Cliquez sur l'icône du carré pour
Klicken Sie auf das quadratische Symbol, um

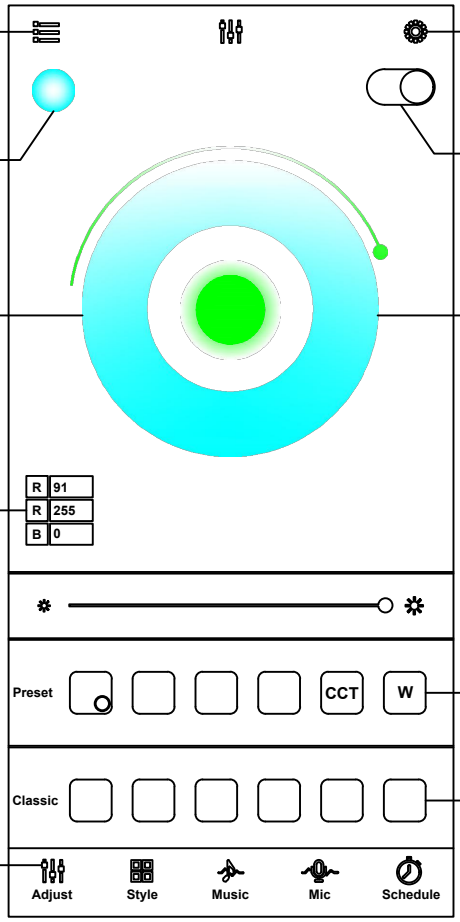

LED Bluetooth controller Features
Caractéristiques du contrôleur Bluetooth LED
LED Bluetooth Controller Eigenschaften

Product Features :
LED Bluetooth controller is directly via mobile phone control remote distance can reach 20m without the need to set up,easy to connect open the software within 5 seconds you can automatically connect the controller ·Flow the rhythm of the music changes ·Group control ·Brightness,speed addition and subtraction ·Maximum can be 10 meters RGB(W)strip ·The software shows that the text is based on the language of the mobile phone set up automatic transformation of Chinese and English Animation Effect: ·Colorful gradient ● All kinds of monchrome,double color gradient ● All kinds of monochrome,double color, colorfull flashing Follow the thythm of the music chagnes Product Paramters: ·Bluetooth:BLE V4.2 ·Input Voltage:4.5~26V ·Working Temp:-25~75 ·Size:43*22*11mm ·Weight:30g ·Max Power:144W(24V)

Caractéristiques du produit:
Le contrôleur Bluetooth LED est contrôlé directement via le téléphone portable La distance à distance peut atteindre 20m Aucun réglage requis, connexion facile Ouvrez le logiciel pour se connecter automatiquement au contrôleur dans les 5 secondes · Changement de rythme de la musique fluide · Contrôle de groupe · Luminosité, augmentation et diminution de vitesse · Jusqu'à 10 mètres barres RVB (W) · Le logiciel affiche le texte Convertir automatiquement les effets d'animation chinois et anglais selon les paramètres de langue du téléphone portable: · Dégradé coloré ● Divers dégradés monochrome et bicolore ● Divers clignotements monochrome, bicolore et colorés suivent le rythme de la musique chagnes Paramètres du produit: · Bluetooth: BLE V4.2 · Tension d'entrée: 4,5 ~ 26 V · Température de fonctionnement: -25 ~ 75 · Taille: 43 * 22 * 11 mm · Poids: 30 g · Puissance maximale: 144 W (24 V)

Produktmerkmale:
Der LED-Bluetooth-Controller wird direkt über das Mobiltelefon gesteuert. Die Fernentfernung kann bis zu 20 m erreichen. Keine Einstellung erforderlich, einfach zu verbinden. Öffnen Sie die Software, um den Controller automatisch innerhalb von 5 Sekunden zu verbinden · Rhythmusänderungen der fließenden Musik · Gruppensteuerung · Helligkeit, Geschwindigkeitserhöhung und -verringerung · Maximal 10 Meter RGB(W)-Streifen · Software zeigt Text, um den Animationseffekt zwischen Chinesisch und Englisch entsprechend den Spracheinstellungen des Mobiltelefons automatisch umzuwandeln: · Bunter Farbverlauf ● Verschiedene einfarbige und zweifarbige Farbverläufe ● Verschiedene einfarbige, zweifarbige und farbenfrohe Blinkungen folgen dem Rhythmus der Musik chagnes Produktparameter: · Bluetooth: BLE V4.2 · Eingangsspannung: 4,5 ~ 26 V · Betriebstemperatur: -25 ~ 75 · Größe: 43 * 22 * 11 mm · Gewicht: 30 g · Maximale Leistung: 144 W (24 V)

Verification of compliance Verification of compliance Verification of compliance

Verification of Compliance

Verification No.:	MK24030235P01-S01
Name and address of Applicant:	**Shenzhen Hongzhengyu Technology Co., LTD** Shenzhen baoan district rock street industrial science and technology industrial park of 2 Haitian lanyu 3 5 floor of A
Name and address of Manufacturer:	**Shenzhen Hongzhengyu Technology Co., LTD** Shenzhen baoan district rock street industrial science and technology industrial park of 2 Haitian lanyu 3 5 floor of A
Product name:	**LED Lamp Strip**
Rated：	DC5V, 2A, Max.10W
Product model(s):	HZY-2835-120D-12V, HZY-2835-30D-5V, HZY-2835-60D-5V, HZY-2835-120D-5V, HZY-2835-60D-12V, HZY-2835-60D-24V, HZY-2835-120D-24V, HZY-2835RGB-60D-5V, HZY-2835RGB-60D-12V, HZY-5050-30D-5V, HZY-5050-60D-5V, HZY-5050-30D-12V, HZY-5050-60D-12V, HZY-5050-60D-24V, HZY-5050RGB-30D-5V, HZY-5050RGB-60D-5V, HZY-5050RGB-30D-12V,HZY-5050RGB-60D-12V, HZY-5050RGB-60D-24V
Product trademark:	N/A

This verification confirms that the product meets the requirements of the following standard.
The conformity was demonstrated based on following standard(s) listed by European Commission as harmonized with LVD Directive 2014/35/EU.

EN IEC 60598-2-1:2021;
EN IEC 60598-1:2021+ A11:2022

The verification has been carried out in accordance with individual rules and conditions agreed with the applicant. Evaluation has been carried out in accordance with:

Test report(s) No.:	MK24030235P01-S01
Test conducted by:	TMC Testing Services (Shenzhen) Co., Ltd.
Verification issue date:	April 9, 2024

Notes:

This verification refers to the above mentioned product and its conformity in regards of above mentioned standard(s) was proven on test sample.

This verification does not imply meeting all essential requirements, assessment of the series-production or any other restricted Notified Bodies conformity assessment procedure appropriate for the product.

This verification holder shall use this verification in connection to Verification of Compliance and technical data relevant for the product the verification was issued.

TMC Testing Services (Shenzhen) Co., Ltd.
t:86-755-86642861 cert@tmc-lab.com www.tmc-lab.com
1/F., Block A, Xinshidai Gongrong Industrial Park, No. 2, Shihuan Road, Shilong Community, Shiyan Street, Baoan District, Shenzhen, China

Dawen Xu

Lab Director
Dawen Xu

Bauart geprüft TMC Product Safety Type approved

CE

Verification of compliance Verification of compliance Verification of compliance

Verification of Compliance

Verification No.:	MK23020083-P01C01
Name and address of Applicant:	**Shenzhen Hongzhengyu Technology Co., LTD** Shenzhen baoan district rock street industrial science and technology industrial park of 2 Haitian lanyu 3 5 floor of A
Name and address of Manufacturer:	**Shenzhen Hongzhengyu Technology Co., LTD** Shenzhen baoan district rock street industrial science and technology industrial park of 2 Haitian lanyu 3 5 floor of A
Product name:	**Lamp strip**
Product model(s):	HZY-2835-120D-12V, HZY-2835-30D-5V, HZY-2835-60D-5V, HZY-2835-120D-5V, HZY-2835-60D-12V, HZY-2835-60D-24V, HZY-2835-120D-24V, HZY-2835RGB-60D-5V, HZY-2835RGB-60D-12V, HZY-5050-30D-5V, HZY-5050-60D-5V, HZY-5050-30D-12V, HZY-5050-60D-12V, HZY-5050-60D-24V, HZY-5050RGB-30D-5V, HZY-5050RGB-60D-5V, HZY-5050RGB-30D-12V, HZY-5050RGB-60D-12V, HZY-5050RGB-60D-24V
Product trademark:	N/A

This verification confirms that the product meets the requirements of the following standard.

The conformity was demonstrated based on following standard(s) listed by European Commission as harmonized with Directive RoHS 2.0 Directive (EU) 2015/863 and (EU)2017/2102 amending Annex II to Directive 2011/65/EU

IEC 62321-1:2013	IEC 62321-3-1:2013
IEC 62321-4:2013/AMD1:2017	IEC 62321-5:2013
IEC 62321:6-2015	IEC 62321-7-1:2015
IEC 62321-7-2:2017	IEC 62321-8:2017

The verification has been carried out in accordance with individual rules and conditions agreed with the applicant. Evaluation has been carried out in accordance with:

Test report(s) No.:	MK23020083-P01C01
Test conducted by:	TMC Testing Services (Shenzhen) Co., Ltd.
Verification issue date:	February 25, 2023

Notes:

This verification refers to the above mentioned product and its conformity in regards of above mentioned standard(s) was proven on test sample.

This verification does not imply meeting all essential requirements, assessment of the series-production or any other restricted Notified Bodies conformity assessment procedure appropriate for the product.

This verification holder shall use this verification in connection to verification of conformity and technical data relevant for the product the verification was issued.

TMC Testing Services (Shenzhen) Co., Ltd.

t:86-755-86642861 cert@tmc-lab.com www.tmc-lab.com

1st Floor, Block A1, Zone A, Xinshidai Gongrong Industrial Park, No. 2, Shihuan Road, Shiyan Street, Baoan District, Shenzhen, China

Bauart geprüft TMC Access to global market Product Safety

Lab Vivian Liang

Vivian Liang

Verification of compliance Verification of compliance Verification of compliance

Verification of Compliance

Verification No.:	MK23020083-P01E01
Name and address of Applicant:	**Shenzhen Hongzhengyu Technology Co., LTD** Shenzhen baoan district rock street industrial science and technology industrial park of 2 Haitian lanyu 3 5 floor of A
Name and address of Manufacturer	**Shenzhen Hongzhengyu Technology Co., LTD** Shenzhen baoan district rock street industrial science and technology industrial park of 2 Haitian lanyu 3 5 floor of A
Product name:	**Lamp strip**
Rated:	5V ⎓ 1A
Product model(s):	HZY-2835-120D-12V, HZY-2835-30D-5V, HZY-2835-60D-5V, HZY-2835-120D-5V, HZY-2835-60D-12V, HZY-2835-60D-24V, HZY-2835-120D-24V, HZY-2835RGB-60D-5V, HZY-2835RGB-60D-12V, HZY-5050-30D-5V, HZY-5050-60D-5V, HZY-5050-30D-12V, HZY-5050-60D-12V, HZY-5050-60D-24V, HZY-5050RGB-30D-5V, HZY-5050RGB-60D-5V, HZY-5050RGB-30D-12V, HZY-5050RGB-60D-12V, HZY-5050RGB-60D-24V
Product trademark:	N/A

This verification confirms that the product meets the requirements of the following standard.

The conformity was demonstrated based on following standard(s) listed by European Commission as harmonized with EMC Directive 2014/30/EU.

EN IEC 55015:2019+A11:2020

IEC 61547:2020

The verification has been carried out in accordance with individual rules and conditions agreed with the applicant. Evaluation has been carried out in accordance with:

Test report(s) No.:	MK23020083-P01E01
Test conducted by:	TMC Testing Services (Shenzhen) Co., Ltd.
Verification issue date:	February 25, 2023

Notes:

This verification refers to the above mentioned product and its conformity in regards of above mentioned standard(s) was proven on test sample.

This verification does not imply meeting all essential requirements, assessment of the series-production or any other restricted Notified Bodies conformity assessment procedure appropriate for the product.

This verification holder shall use this verification in connection to verification of conformity and technical data relevant for the product the verification was issued.

TMC Testing Services (Shenzhen) Co., Ltd.

t:86-755-86642861 cert@tmc-lab.com www.tmc-lab.com

1st Floor, Block A1, Zone A, Xinshidai Gongrong Industrial Park, No. 2, Shihuan Road, Shiyan Street, Baoan District, Shenzhen, China

Bauart geprüft TMC Access to global market Product Safety Approved

Lab

Vivian Jiang

Certificate – Сертификат – 證明書 – Certificat – 증명서 – شهادة

Shenzhen ZKT Technology Co., Ltd.
1/F, No. 101, Building B, No. 6, Tangwei Community Industrial Avenue,
Fuhai Street, Bao'an District, Shenzhen, China

Certificate of Compliance

Certificate Number: ZKT-25070215182C

Certificate's Holder	:	Dongguan Yihong Hardware Electronics Co., Ltd Room 1106, No.2, Shangheng Road, Chang' an Town, Dongguan
Manufacturer	:	Dongguan Yihong Hardware Electronics Co., Ltd Room 1106, No.2, Shangheng Road, Chang' an Town, Dongguan
Trade Mark	:	N/A
Product	:	LED controller
Model(s)	:	YH-6183 YH-252, YH-284, YH-290, YH-287, YH-358, YH-360, YH-6180, YH-6184

Requirement	Standard	Report No.
Art.3.1(a) Safety	EN IEC 62368-1:2024+A11:2024	ZKT-25070215183S
Art.3.1(a) Health	EN IEC 62311:2020 EN 50665:2017	ZKT-25070215182E-1
Art.3.1(b) EMC	ETSI EN 301 489-1 V2.2.3 (2019-11) ETSI EN 301 489-17 V3.3.0 (2024-07)	ZKT-25070215182E-2
Art.3.2 Radio	ETSI EN 300 328 V2.2.2 (2019-07)	ZKT-25070215182E-3

This Attestation of Compliance is issued on a voluntary basis for electrical equipment below the voltage limits of Radio Equipment Directive (RED) 2014/53/EU. The essential requirement are fulfilled accordingly based on the technical specifications applicable at the time of issuance.

Shenzhen ZKT Technology Co., Ltd.
APPROVED
Manager
Jul. 07, 2025

This Certificate of Conformity is based on single evaluation of the submitted sample(s) of the above mentioned product. It does not imply an assessment of the whole product and relevant . Directives to be observed.

精准检测
PRECISE TESTING

CERTIFICATE OF CONFORMITY

No.: PTC25102309602C-EN01V01

Applicant	:	**Dongguan Yihong Hardware electronics Co., LTD**
Address	:	**Room 901, No. 2, Shangheng Road, Chang'an Town, Dongguan City, Guangdong Province, 523880 China**
Manufacturer	:	**Dongguan Yihong Hardware electronics Co., LTD**
Address	:	**Room 901, No. 2, Shangheng Road, Chang'an Town, Dongguan City, Guangdong Province, 523880 China**
Product Name	:	**LED Controler**
Model No.	:	**YH-289,YH-980 ,YH-918 ,YH-917 ,YH-818,YH-816,YH-6181,YH-358**

The submitted sample of the above equipment has been tested and found to comply with the following European Directive:

RoHS Directive 2011/65/EU & EU No.2015/863

The standard(s) used for showing compliance with the essential requirements:

Applicable Standard(s)	Test Report(s) Number
IEC 62321-1:2013, IEC 62321-2:2021 IEC 62321-3-1:2013, IEC 62321-3-2:2020 IEC62321-4: 2013+AMD1:2017 IEC 62321-5:2013 IEC 62321-6:2015, IEC 62321-7-1: 2015 IEC 62321-7-2: 2017, IEC 62321-8:2017	**PTC25102309602C-EN01V01**

This certificate is part of the full test report(s) and should be read in conjunction with it. This certificate is based on an evaluation of one sample of above mentioned product. It does not imply assessment of the production of the product. Without the written approval of Precise Testing & Certification (Guangdong) Co., Ltd., this certificate is not permitted to be reproduced, except in full. It is not permitted to use the test lab's logo.

RoHS

PRECISE TESTING & CERTIFICATION (GUANGDONG) CO., LTD.

Jacky Ou

Jacky Ou
Manager
Date:Dec. 04, 2025

Precise Testing & Certification (Guangdong) Co., Ltd.
Building 1, No.6, Tongxin Road, Dongcheng Street,
Dongguan, Guangdong, China
Tel: 86 769 38808222 Web:www.ptc-testing.com
Mail: inquiry@ptc-testing.com

CERTIFICATE OF CONFORMITY

Low Voltage Directive 2014/35/EU

This Certificate of Conformity is hereby issued to the product designated below:

Certificate No. ..... :	24SP01101L01
Report No. ..... :	SP2401101L01
Date Issue. ..... :	2024-04-26
Applicant's name ..... :	Guangdong Sangu Technology Co., Ltd
Address ..... :	402, Chuangye building, 8-28, Shaqi community Central Road, Xinqiao street, Bao'an District, Shenzhen.
Manufacturer's name ..... :	Guangdong Sangu Technology Co., Ltd
Address ..... :	402, Chuangye building, 8-28, Shaqi community Central Road, Xinqiao street, Bao'an District, Shenzhen.
Product Description ..... :	POWER ADAPTER
Model(s)/Type References :	SG-050yyyyz, GA-050yyyyz, GAT-050yyyyz, HZ-050yyyyz, SG-050yyyyAz, GA-050yyyyAz, GAT-050yyyyAz, HZ-050yyyyAz, SG-050yyyyAzC, GA-050yyyyAzC, GAT-050yyyyAzC, HZ-050yyyyAzC, SG-xxxyyyy12Az (xxx, yyyy, z are variables, see table A for details)
Parameters ..... :	Input: 100-240V~, 50/60Hz, 0.3A Max. (For models SG-050yyyyz, GA-050yyyyz, GAT-050yyyyz, HZ-050yyyyz, SG-050yyyyAz, GA-050yyyyAz, GAT-050yyyyAz, HZ-050yyyyAz, SG-050yyyyAzC, GA-050yyyyAzC, GAT-050yyyyAzC, HZ-050yyyyAzC) Input: 100-240V~, 50/60Hz, 0.6A Max. (For models SG-xxxyyyy12Az) Output: See table B for details
Standard(s) ..... :	EN IEC 62368-1:2020/A11:2020

On the basis of the referenced test report(s), sample(s) tested of the above product have been found to comply with the standards harmonized with the directives listed on this verification at the time the tests were carried out. Other standards and Directives may be relevant to the product. This verification is part of the full test report(s) and should be read in conjunction with it(them).

Once compliance with all product relevant CE mark directives are verified, including any relevant e.g. risk assessment and production control, the manufacturer may indicate compliance by signing a Declaration of Conformity themselves and applying the mark to products identical to the tested sample(s)

Approved By

Eric Liu

Director of engineering department

Dongguan Pubiao Testing Technology Co., Ltd. CERTIFICATE

Dongguan Pubiao Testing Technology Co., Ltd
No. 3, 1/F., Building A, No.30, Minghua Road, Juzhou, Shijie, Dongguan, Guangdong, China.
Tel: +86 769 81813516 E-mail: service@pubiaotest.com Web: www.pubiaotest.com

CERTIFICATE OF CONFORMITY

Low Voltage Directive 2014/35/EU

Appendix of Certificate No.: 24SP01101L01

Model Description:

Table A: Definition of variables

Variable	Range of variable	Content
xxx	050-240	3 digits, indicates 10 times of output voltage in V and in step of 0.1V. eg. 050=5.0V, 240=24.0V.
yyyy	0100-2100	4 digits, indicates 1000 times of output current in A and in step of 0.01A. eg. 0100=0.1A, 2100=2.1A.
z	E, B	One capital letter representing the plug type for different countries. E represents European plug and Russian plug; B represents British plug.

DongGuan PuBiao Testing Technology Co., Ltd * CERTIFICATE *

DongGuan PuBiao Testing Technology Co., Ltd
No. 3, 1/F., Building A, No.30, Minghua Road, Juzhou, Shijie, Dongguan, Guangdong, China.
Tel: +86 769 81813516 E-mail: service@pubiaotest.com Web: www.pubiaotest.com

CERTIFICATE OF CONFORMITY

Low Voltage Directive 2014/35/EU

Appendix of Certificate No.: 24SP01101L01

Table B: Model list and output ratings:

Model	Output voltage (Vdc)	Output current (A)	Max Power (W)	Transformer
SG-050yyyyz, GA-050yyyyz, GAT-050yyyyz, HZ-050yyyyz, SG-050yyyyAz, GA-050yyyyAz, GAT-050yyyyAz, HZ-050yyyyAz, SG-050yyyyAzC, GA-050yyyyAzC, GAT-050yyyyAzC, HZ-050yyyyAzC	5.0	0.10-2.0	10.0	EF1510
SG-xxxyyyy12Az	5.0-5.5	0.10-2.1	11.55	
	5.6-12.0	0.10-2.0	12.00	
	12.1-24.0	0.10-1.0	12.00	EF1510-1

Remark:

1) The rated output voltage is rising from 5.0V and in steps of 0.1V.
2) The rated output current is rising from 0.1A and in steps of 0.01A, but not more than the indicated max o/p current.
3) Actual output current depends on range of output voltage. The max. Output current multiplied by output voltage cannot exceed the max. Output power.

DongGuan PuBiao Testing Technology Co., Ltd * CERTIFICATE *

DongGuan PuBiao Testing Technology Co., Ltd
No. 3, 1/F., Building A, No.30, Minghua Road, Juzhou, Shijie, Dongguan, Guangdong, China.
Tel: +86 769 81813516 E-mail: service@pubiaotest.com Web: www.pubiaotest.com

RoHS

CERTIFICATE OF CONFORMITY

RoHS Directive (EU) 2015/863 amending Annex II to Directive 2011/65/EU

This Certificate of Conformity is hereby issued to the product designated below:

Certificate No.....:	24CP01101R01
Report No.....:	CP2401101R01
Date Issue.....:	2024-05-06
Applicant's name.....:	Guangdong Sangu Technology Co., Ltd
Address.....:	402, Chuangye building, 8-28, Shaqi community Central Road, Xinqiao street, Bao'an District, Shenzhen.
Manufacturer's name.....:	Same as applicant
Address.....:	Same as applicant
Product Description .....:	POWER ADAPTER
Model(s)/Type References :	SG-050yyyyz,GA-050yyyyz, GAT-050yyyyz, HZ-050yyyyz, SG-050yyyyAz, GA-050yyyyAz,GAT-050yyyyAz,HZ-050yyyyAz,SG-050yyyyAzC, GA-050yyyyAzC,GAT-050yyyyAzC,HZ-050yyyyAzC,SG-xxxyyyy12Az (xxx, yyyy, z are variables, see table A for details)
Conclusion .....:	Based on the performed tests on submitted sample(s), the results of Lead, Mercury, Cadmium, Hexavalent chromium, Polybrominated biphenyls (PBBs), Polybrominated diphenyl ethers (PBDEs) and Phthalates such as Bis(2-ethylhexyl) phthalate (DEHP) , Butyl benzyl phthalate (BBP), Dibutyl phthalate (DBP) , and Diisobutyl phthalate (DIBP) comply with the limits as set by RoHS Directive (EU) 2015/863 amending Annex II to Directive 2011/65/EU.
Standard(s).....:	IEC 62321-4:2013+A1:2017; IEC 62321-5:2013 IEC 62321-7-1:2015; IEC 62321-7-2:2017 IEC 62321-6:2015; IEC 62321-8:2017

On the basis of the referenced test report(s), sample(s) tested of the above product have been found to comply with the standards harmonized with the directives listed on this verification at the time the tests were carried out. Other standards and Directives may be relevant to the product. This verification is part of the full test report(s) and should be read in conjunction with it(them).

Once compliance with all product relevant CE mark directives are verified, including any relevant e.g. risk assessment and production control, the manufacturer may indicate compliance by signing a Declaration of Conformity themselves and applying the mark to products identical to the tested sample(s).

Approved By

Dongguan PuBiao Testing Technology Co., Ltd. * CERTIFICATE *

Eric Liu

Director of engineering department

Dongguan Pubiao Testing Technology Co., Ltd.
No. 3, 1/F., Building A, No.30, Minghua Road, Juzhou, Shijie, Dongguan, Guangdong, China.
Tel: +86 769 81813516 E-mail: service@pubiaotest.com Web: www.pubiaotest.com

RoHS

CERTIFICATE OF CONFORMITY

RoHS Directive (EU) 2015/863 amending Annex II to Directive 2011/65/EU

Appendix of Certificate No.: 24CP01101R01

Model Description:

Table A: Definition of variables

Variable	Range of variable	Content
xxx	050-240	3 digits, indicates 10 times of output voltage in V and in step of 0.1V. eg. 050=5.0V, 240=24.0V.
yyyy	0100-2100	4 digits, indicates 1000 times of output current in A and in step of 0.01A. eg. 0100=0.1A, 2100=2.1A.
z	E, B	One capital letter representing the plug type for different countries. E represents European plug and Russian plug; B represents British plug.

DongGuan PuBiao Testing Technology Co., Ltd. * CERTIFICATE *

Dongguan Pubiao Testing Technology Co., Ltd.
No. 3, 1/F., Building A, No.30, Minghua Road, Juzhou, Shijie, Dongguan, Guangdong, China.
Tel: +86 769 81813516 E-mail: service@pubiaotest.com Web: www.pubiaotest.com

RoHS

CERTIFICATE OF CONFORMITY

RoHS Directive (EU) 2015/863 amending Annex II to Directive 2011/65/EU

Appendix of Certificate No.: 24CP01101R01

Table B: Model list and output ratings:

Model	Output voltage (Vdc)	Output current (A)	Max Power (W)	Transformer
SG-050yyyyz, GA-050yyyyz, GAT-050yyyyz, HZ-050yyyyz, SG-050yyyyAz, GA-050yyyyAz, GAT-050yyyyAz, HZ-050yyyyAz, SG-050yyyyAzC, GA-050yyyyAzC, GAT-050yyyyAzC, HZ-050yyyyAzC	5.0	0.10-2.0	10.0	EF1510
SG-xxxyyyy12Az	5.0-5.5	0.10-2.1	11.55	
	5.6-12.0	0.10-2.0	12.00	
	12.1-24.0	0.10-1.0	12.00	EF1510-1

Remark:

1) The rated output voltage is rising from 5.0V and in steps of 0.1V.
2) The rated output current is rising from 0.1A and in steps of 0.01A, but not more than the indicated max o/p current.
3) Actual output current depends on range of output voltage. The max. Output current multiplied by output voltage cannot exceed the max. Output power.

Dongguan Pubiao Testing Technology Co., Ltd. * CERTIFICATE *

Dongguan Pubiao Testing Technology Co., Ltd.
No. 3, 1/F., Building A, No.30, Minghua Road, Juzhou, Shijie, Dongguan, Guangdong, China.
Tel: +86 769 81813516 E-mail: service@pubiaotest.com Web: www.pubiaotest.com

CERTIFICATE OF CONFORMITY

Electromagnetic Compatibility (EMC) Directive 2014/30/EU

This Certificate of Conformity is hereby issued to the product designated below:

Certificate No. ..... :	24EP01101E01
Report No. ..... :	EP2401101E01
Date Issue. ..... :	2024-04-28
Applicant's name ..... :	Guangdong Sangu Technology Co., Ltd
Address ..... :	402, Chuangye building, 8-28, Shaqi community Central Road, Xinqiao street, Bao'an District, Shenzhen.
Manufacturer's name ..... :	Guangdong Sangu Technology Co., Ltd
Address ..... :	402, Chuangye building, 8-28, Shaqi community Central Road, Xinqiao street, Bao'an District, Shenzhen.
Product Description ..... :	POWER ADAPTER
Model(s)/Type References :	SG-050yyyyz, GA-050yyyyz, GAT-050yyyyz, HZ-050yyyyz, SG-050yyyyAz, GA-050yyyyAz, GAT-050yyyyAz, HZ-050yyyyAz, SG-050yyyyAzC, GA-050yyyyAzC, GAT-050yyyyAzC, HZ-050yyyyAzC, SG-xxxyyyy12Az (xxx, yyyy, z are variables, appendix for details)
Parameters ..... :	See appendix for details
Standard(s) ..... :	EN 55032:2015+A11:2020+A1:2020 EN 55035:2017+A11:2020 EN IEC 61000-3-2:2019+A1:2021 EN 61000-3-3:2013+A1:2019+A2:2021

On the basis of the referenced test report(s), sample(s) tested of the above product have been found to comply with the standards harmonized with the directives listed on this verification at the time the tests were carried out. Other standards and Directives may be relevant to the product. This verification is part of the full test report(s) and should be read in conjunction with it(them).

Once compliance with all product relevant CE mark directives are verified, including any relevant e.g. risk assessment and production control, the manufacturer may indicate compliance by signing a Declaration of Conformity themselves and applying the mark to products identical to the tested sample(s).

Approved By

Dongguan PuBiao Testing Technology Co., Ltd. CERTIFICATE

Eric Liu

Director of engineering department

Dongguan Pubiao Testing Technology Co., Ltd

No. 3, 1/F., Building A, No.30, Minghua Road, Juzhou, Shijie, Dongguan, Guangdong, China

Tel: +86 769 81813516 E-mail: service@pubiaotest.com Web: www.pubiaotest.com

CERTIFICATE OF CONFORMITY

Electromagnetic Compatibility (EMC) Directive 2014/30/EU

Appendix of Certificate No.: 24EP01101E01

Table A: Definition of variables

Variable	Range of variable	Content
xxx	050-240	3 digits, indicates 10 times of output voltage in V and in step of 0.1V. eg. 050=5.0V, 240=24.0V.
yyyy	0100-2100	4 digits, indicates 1000 times of output current in A and in step of 0.01A. eg. 0100=0.1A, 2100=2.1A.
z	E, B	One capital letter representing the plug type for different countries. E represents European plug and Russian plug; B represents British plug.

Table B: Model list and input / output ratings

Model	Rated intput	Rated output			Transformer
		Voltage range (VDC)	Current range (A)	Max. Power (W)	
SG-050yyyyz, GA-050yyyyz, GAT-050yyyyz, HZ-050yyyyz, SG-050yyyyAz, GA-050yyyyAz, GAT-050yyyyAz, HZ-050yyyyAz, SG-050yyyyAzC, GA-050yyyyAzC, GAT-050yyyyAzC, HZ-050yyyyAzC,	100-240V~, 50/60Hz, 0.3A Max.	5.0	0.1-2.0	10.0	EF1510
SG-xxxyyyy12Az	100-240V~, 50/60Hz, 0.6A Max.	5.0-5.5	0.10-2.1	11.55	EF1510-1
		5.6-12.0	0.10-2.0	12.00	
		12.1-24.0	0.10-1.0	12.00	

Dongguan Pubiao Testing Technology Co., Ltd * CERTIFICATE *

Dongguan Pubiao Testing Technology Co., Ltd
No. 3, 1/F., Building A, No.30, Minghua Road, Juzhou, Shijie, Dongguan, Guangdong, China
Tel: +86 769 81813516 E-mail: service@pubiaotest.com Web: www.pubiaotest.com

Importeur	Decobus Handel GmbH
Adresse	Innungsstraße 9, 21244 Buchholz,Deutschland
Email/URL	https://www.decobusgroup.de
Hersteller	Shenzhen Hongzhengyu Technology Co., LTD
Adresse	Floor 5, Building A, Haitian Lanyu No.3, No.2 Industrial Science and Technology Industrial Park, Shiyan street, Bao 'an District, Shenzhen
Email/URL	https://aoligd.1688.com/
Partienummer	HZY-5050RGB-30D-12V
Hergestellt in	China
EC REP	Decobus Handel GmbH Innungsstraße 9, 21244 Buchholz,Deutschland www.decobusgroup.de

Product Name:LED light strip
Model:HZY-5050RGB-30D-12V
Rated voltage:DC12V
Rated frequency:50-60HZ
Power:5W/M

Importeur	Decobus Handel GmbH
Adresse	Innungsstraße 9, 21244 Buchholz,Deutschland
Email/URL	https://www.decobusgroup.de
Hersteller	Dongguan Yihong Hardware electronics Co.,Ltd
Adresse	Room 1106,No.2 Shangheng Road, Chang'an Town Dongguan,Guangdong,China
Email/URL	https://262762219@qq.com
Partienummer	YH-358
Hergestellt in	China
EC REP	Decobus Handel GmbH Innungsstraße 9, 21244 Buchholz,Deutschland www.decobusgroup.de

Product Name:LED controller
Model:YH-358
Rated voltage:DC5-24V
Rated frequency:50-60HZ
Power:10W

Importeur	Decobus Handel GmbH
Adresse	Innungsstraße 9, 21244 Buchholz,Deutschland
Email/URL	https://www.decobusgroup.de
Hersteller	Guangdong sangu Technology Co., LTD
Adresse	402 Chuangye building,8-28,Shaqi community Central Road,Xinqiao street Bao'an District,Shenzhen
Email/URL	https://aoligd.1688.com/
Partienummer	SG 120100012AE
Hergestellt in	China
EC REP	Decobus Handel GmbH Innungsstraße 9, 21244 Buchholz,Deutschland www.decobusgroup.de

Product Name:Power Adapter
Model:SG 120100012AE
Rated voltage:DC12V
Rated frequency:50-60HZ
Power:12W

Points de collecte sur www.quefairedemesdechets.fr
Privilégiez la réparation ou le don de votre appareil !