# MONTAGEANLEITUNG/ASSEMBLY INSTRUCTIONS

Artikelnummer/Item Number:

N622P473246
N622P473247
N622P473248

Unser Bett wird in 3 Paketen geliefert. Die Lieferzeit dieser 3 Pakete konnen abweichen. bittehaben Sie etwas Geduld und vielen Dank furIhr Verstandnis.

Our bed will be sent to you in 3 packages. The delivery time of these 3 parcels may be different. Please be patient. Thank you for your understanding.

## Bett

140*200CM

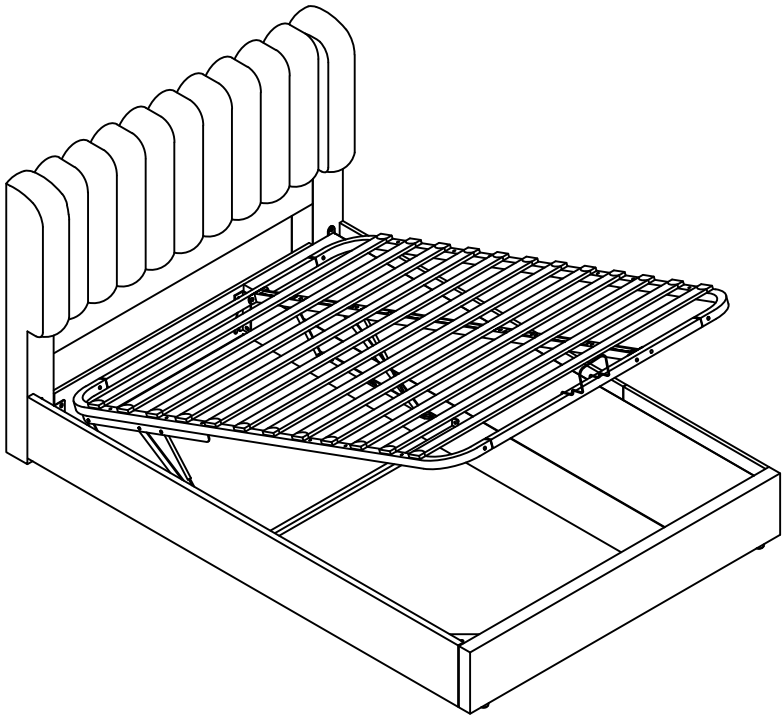

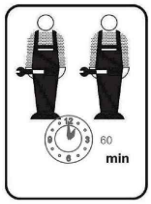

# INSTRUCTIONS

## IMPORTANT-READ CAREFULLY-RETAIN FOR FUTURE REFERENCE

a) **WARNING** -Children can become trapped between the bed and the wall, the adjoining pieces of furniture (e.g. cupboards) and the lke. To avoid risk of serious injury the distance between the safety barrier and the adjoining structure shall not exceed 90 mm or shall be more than 230 mm.

b) **WARNING**-Do not use the bed if any structural part is broken or missing; Replacement parts are between requested from the manufacturer or the store.

c) **WARNING**-Do not climb or wiggle on any non-designated structures.

d) it is imperative to always follow the installation instructions and manufacturer's use.

e) The recommended size of the mattress to be used with the bed is 200cmx140cm, maximum thickness mattress:20cm.

f) It is necessary to ventilate the room in order to maintain a low level moisture and prevent mold growth in the bed and its periphery.

g) Joining devices should always be tightened properly and regularly verified. Tighten if necessary.

# ANLEITUNGEN

## WICHTIG - SORGFÄLTIG LESEN - FÜR SPÄTERE VERWENDUNG AUFBEWAHREN

a) **WARNUNG** - Kinder können zwischen dem Bett und der Wand, den angrenzenden Möbelstücken (z. B. Schränken) und der Lücke eingeklemmt werden. Um die Gefahr schwerer Verletzungen zu vermeiden, darf der Abstand zwischen der Sicherheitsbarriere und der angrenzenden Struktur nicht mehr als 90 mm oder mehr als 230 mm betragen.

b) **WARNUNG**-Das Bett darf nicht benutzt werden, wenn ein Bauteil gebrochen ist oder fehlt; Ersatzteile sind beim Hersteller oder im Geschäft anzufordern.

c) **WARNUNG** - Klettern oder wackeln Sie nicht auf nicht dafür vorgesehenen Strukturen.

d) Befolgen Sie unbedingt die Installationsanweisungen und die Gebrauchsanweisungen des Herstellers.

e) Die empfohlene Größe der Matratze für das Bett beträgt 200x140cm,maximale Dicke der Matratze: 20cm.

f) Es ist notwendig, den Raum zu lüften, um die Feuchtigkeit niedrig zu halten und Schimmelbildung im Bett und seiner Umgebung zu verhindern.

g) Die Verbindungselemente sollten immer richtig angezogen sein und regelmäßig überprüft werden. Ziehen Sie sie gegebenenfalls nach.

## English

**IMPORTANT ! KEEP FOR FUTURE REFERENCE : READ CAREFULLY**

- To be assembled by an adult. Assembly must be checked by an adult before use
- WARNING ! Keep all screws, small parts and plastic bags out of the reach of children
- Properly identify all parts before assembling
- Never use your item if any of its parts are broken or missing
- Should any problems arise, please contact our After Sales Service
- Manufacturer's instructions shall be followed at all times
- Care: Clean with a soft, dry cloth. In case of larger stains, carefully rub with a slightly damp, non-abrasive sponge
- Avoid the risk of fire by not placing furniture near sources of ignition or hot items
- Do not jump on the bed

## Deutsch

**WICHTIG ! ZUM SPÄTEREN NACHSCHLAGEN AUFBEWAHREN: SORGFÄLTIG LESEN**

- Muss von einem Erwachsenen zusammengebaut werden.Der Zusammenbau muss vor dem Gebrauch von einem Erwachsenen überprüft werden
- WARNUNG! Bewahren Sie alle Schrauben, Kleinteile und Plastikbeutel außerhalb der Reichweite von Kindern auf
- Kennzeichnen Sie vor dem Zusammenbau alle Teile richtig
- Benutzen Sie Ihren Artikel niemals, wenn Teile gebrochen sind oder fehlen
- Sollten Probleme auftreten, wenden Sie sich bitte an unseren Kundendienst
- Die Anweisungen des Herstellers sind stets zu befolgen
- Pflege: Mit einem weichen, trockenen Tuch reinigen. Bei größeren Flecken vorsichtig mit einem leicht feuchten, nicht scheuernden Schwamm abreiben. nicht scheuernden Schwamm
- Vermeiden Sie die Gefahr eines Brandes, indem Sie die Möbel nicht in der Nähe von Zündquellen oder heißen Gegenständen aufstellen
- Nicht auf das Bett springen

## Français

**IMPORTANT ! CONSERVER POUR RÉFÉRENCE ULTÉRIEURE : LIRE ATTENTIVEMENT**

- Le montage doit être effectué par un adulte. Le montage doit être vérifié par un adulte avant Utilisation
- ATTENTION ! Tenir les vis, les petites pièces et les sachets en plastique hors de portée des enfants
- Identifiez correctement toutes les pièces avant de les assembler
- N'utilisez jamais votre article si l'une de ses pièces est cassée ou manquante
- En cas de problème, veuillez contacter notre service après-vente
- Les instructions du fabricant doivent être respectées à tout moment
- Entretien : nettoyer avec un chiffon doux et sec. En cas de taches plus importantes, frotter soigneusement avec une éponge non abrasive légèrement humide. légèrement humide et non Abrasive
- Évitez les risques d'incendie en ne plaçant pas les meubles à proximité de sources d'inflammation ou d'objets chauds
- Ne pas sauter sur le lit

## Italiano

**IMPORTANTE! CONSERVARE PER RIFERIMENTO FUTURO: LEGGERE ATTENTAMENTE**

- Deve essere assemblato da un adulto. L'assemblaggio deve essere controllato da un adulto prima dell'uso
- ATTENZIONE! Tenere tutte le viti, le piccole parti e i sacchetti di plastica fuori dalla portata dei bambini
- Identificare correttamente tutte le parti prima dell'assemblaggio
- Non utilizzare mai l'articolo se alcune parti sono rotte o mancanti
- In caso di problemi, si prega di contattare il nostro Servizio Post Vendita
- Le istruzioni del produttore devono essere sempre seguite
- Cura: Pulire con un panno morbido e asciutto. In caso di macchie più estese, strofinare accuratamente con una spugna leggermente umida e nonspugna leggermente umida e non abrasiva
- Evitare il rischio di incendio, non collocando i mobili vicino a fonti di accensione o a oggetti caldi
- Non saltare sul letto

## Español

**¡ IMPORTANTE ! CONSÉRVELO PARA FUTURAS CONSULTAS: LEA ATENTAMENTE**

- Debe ser montado por un adulto. El montaje debe ser comprobado por un adulto antes del uso

ADVERTENCIA Mantenga todos los tornillos, piezas pequeñas y bolsas de plástico fuera del alcance de los niños.

- Identifique correctamente todas las piezas antes de montarlas
- Nunca utilice su artículo si alguna de sus piezas está rota o falta
- Si surge algún problema, póngase en contacto con nuestro Servicio Postventa
- Las instrucciones del fabricante deben seguirse en todo momento
- Cuidado: Limpiar con un paño suave y seco. En caso de manchas más grandes, frote cuidadosamente con una esponja no abrasiva ligeramente humedecida.
- Evite el riesgo de incendio no colocando los muebles cerca de fuentes de ignición u objetos calientes.
- No saltar sobre la cama.

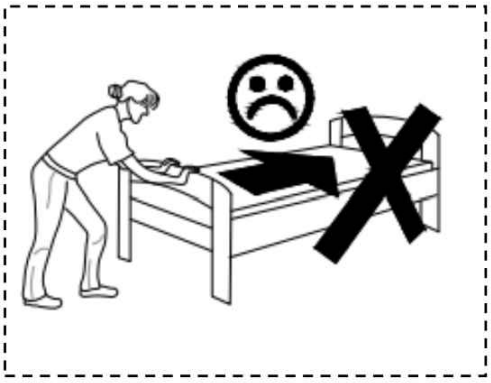

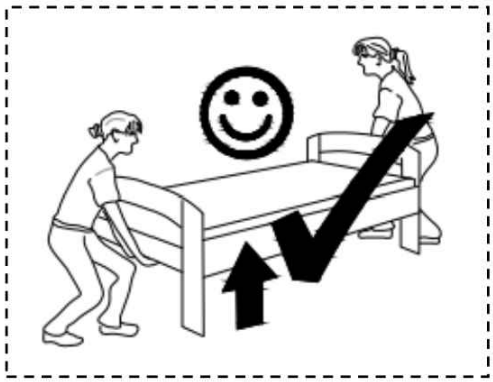

# Stückliste

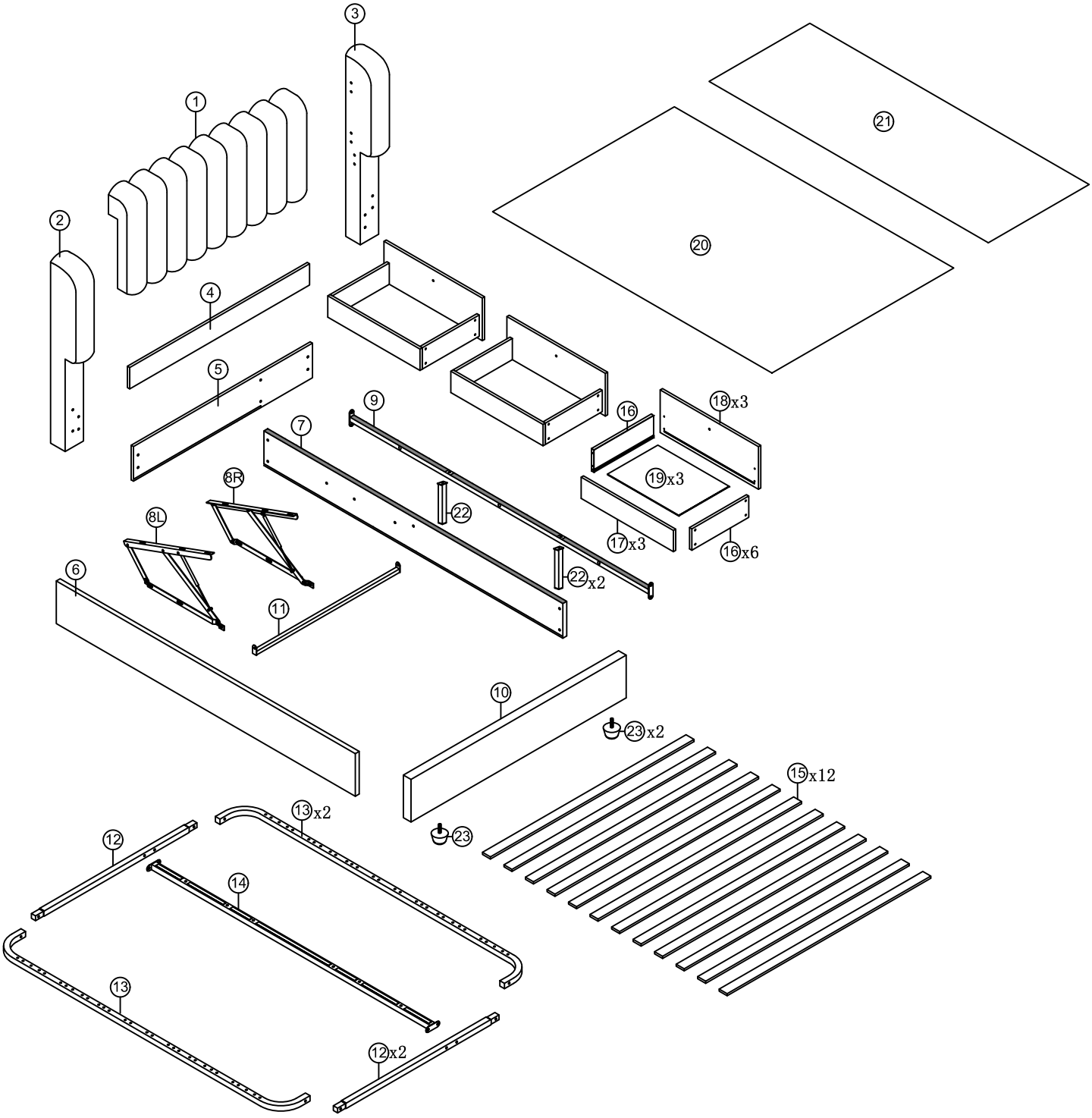
3
1
21
2
20
4
5
9
7
16
18x3
8R
19x3
8L
22
17x3
16x6
6
22x2
11
10
23x2
15x12
13x2
12
14
23
13
12x2

# Liste der Einzelteile

N622P473247

| | | |
|---|---|---|
| 1 x1 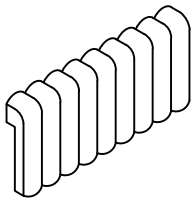 | 4 x1 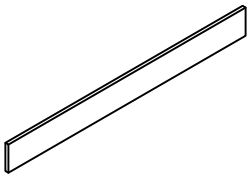 | 5 x1 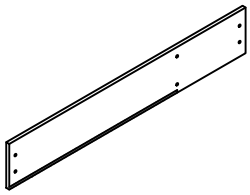 |
| 8L x1 | 8R x1 | 11 x1 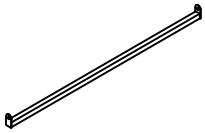 |
| 16 x6 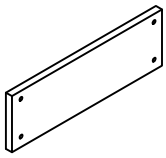 | 17 x3 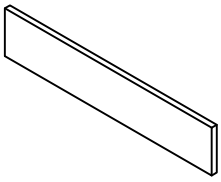 | 19 x3 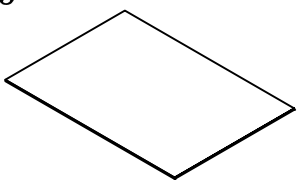 |
| 20 x1 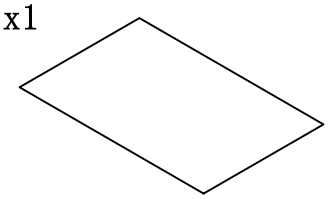 | 21 x1 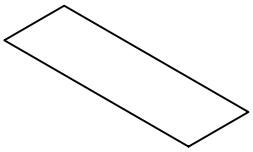 | |

## N622P473246

| | | |
|---|---|---|
| ⑥ x1 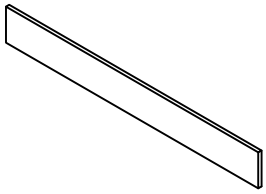 | ⑦ x1 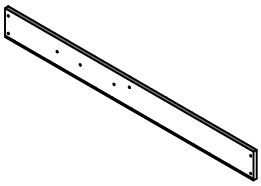 | ⑨ x1 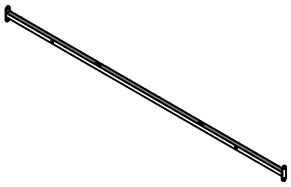 |
| ⑩ x1 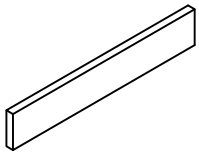 | ⑫ x2 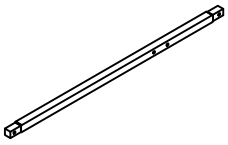 | ⑬ x2 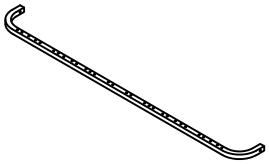 |
| ⑭ x1 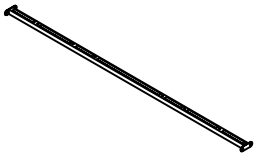 | ⑮ x12 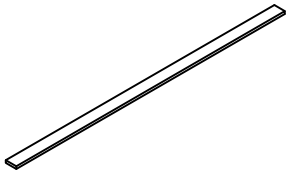 | |

N622P473248

## N622P473248

| | | |
|---|---|---|
| ② x1 | ③ x1 | ⑱ x3 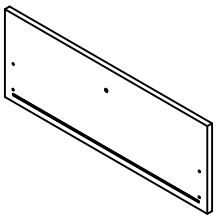 |
| ㉒ x2 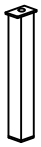 | ㉓ x2 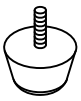 | |

# Hardwareliste

N622P473248

| | | |
|---|---|---|
| Ax1 | Bx62 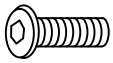 M8x18mm | Cx16 M8x45mm |
| Dx3 M6x15mm | Ex24 M3x20mm | Fx14 |
| Gx4 | Hx1 | Ix24 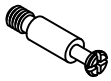 |
| Jx24 | Kx6 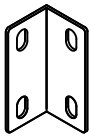 | Lx1 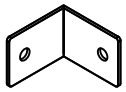 |
| Mx1 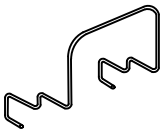 | Nx2 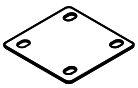 | Ox1 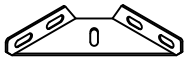 |
| Px4 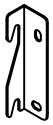 | Qx24 | Rx12 |
| Sx1 | Tx1 | |

**DE**:Vor dem Einbau die Schrauben in die Löcher stecken und festziehen, aber nicht bis 100%, 70% bis 80% anziehen reicht aus. Schließlich, nachdem alle Schrauben installiert sind, ziehen Sie alle Schrauben auf 100 %.

Wenn Sie auf diese Probleme stoßen, wie z. B. Fehlausrichtung der Löcher oder Unfähigkeit, bestimmte Teile zu installieren, überprüfen Sie bitte, ob die Schrauben korrekt verwendet werden und passen Sie die Dichtigkeit der Schrauben an.

**UK**:Before installation, insert the screws into the holes and tighten them, but do not tighten them to 100%, 70% to 80% is sufficient. Finally, after all screws are installed, tighten all screws to 100%.

If you encounter these issues, such as if the holes cannot be aligned or some parts cannot be installed, please check if the screws are used correctly and adjust the tightness of the screws.

**FR**:Insérer la vis dans le trou avant la fin de l'assemblage, serrer la vis, mais ne pas serrer à 100%, 70% ~ 80% est correct. Enfin, une fois que toutes les vis sont bien serrées, toutes les vis sont serrées à 100%.

Si vous rencontrez ces problèmes, par exemple si les trous ne sont pas alignés ou si certaines pièces ne peuvent pas être montées, vérifiez que les vis sont utilisées correctement et Ajustez leur serrage.

## Schritt 1:

| | | |
|---|---|---|
| A | | 1 |
| B | M8x18mm | 16 |
| K | | 4 |

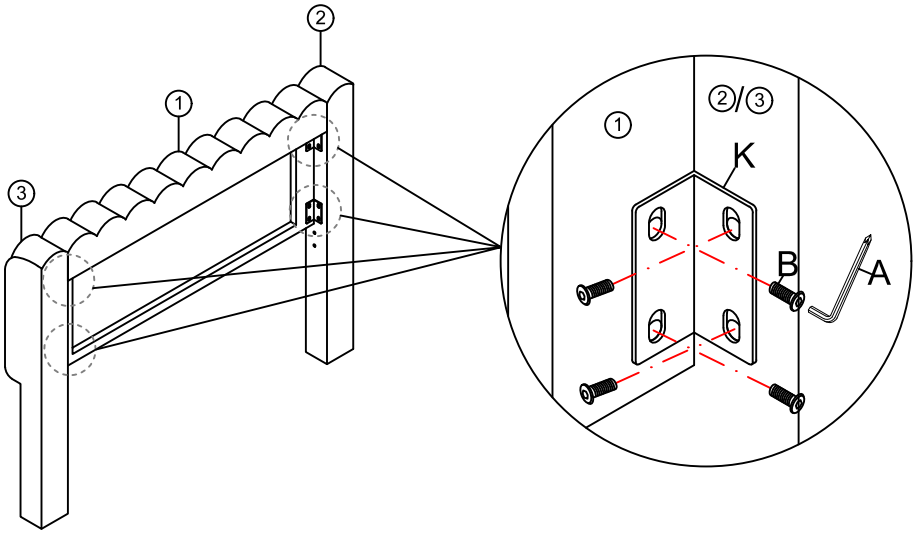


## Schritt 2:

| | | |
|---|---|---|
| A | | 1 |
| B | M8x18mm | 8 |
| K | | 2 |

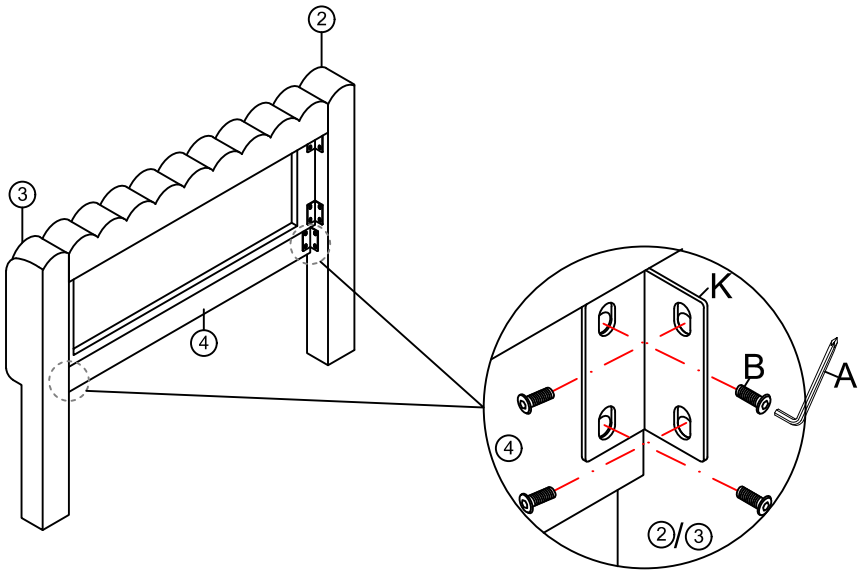

## Schritt 3:

| | | |
|---|---|---|
| A | | 1 |
| B | M8x18mm | 8 |
| N | | 2 |

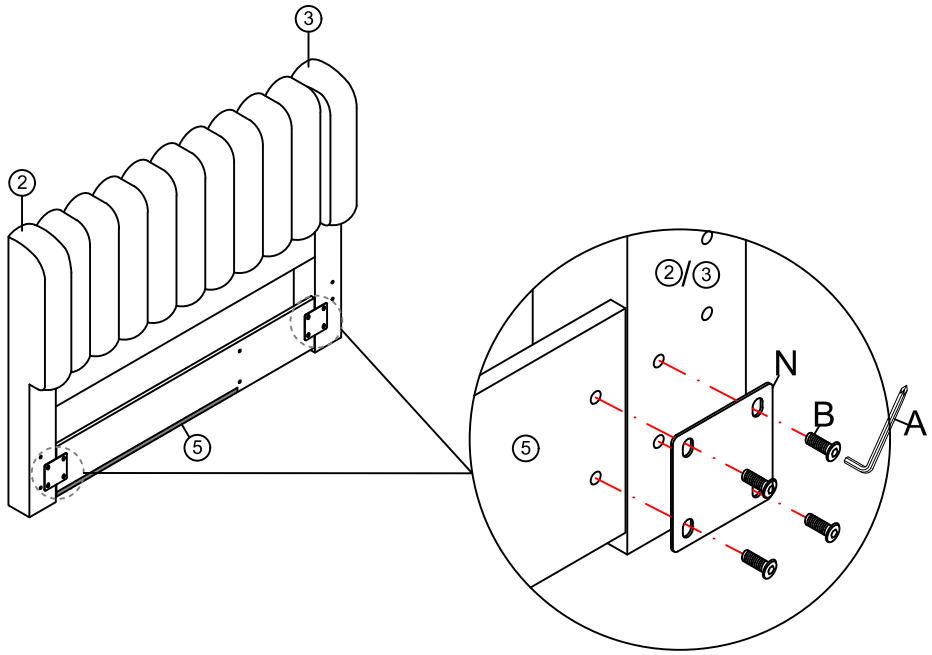


## Schritt 4:

| | | |
|---|---|---|
| A | | 1 |
| B | M8x18mm | 8 |
| P | | 2 |

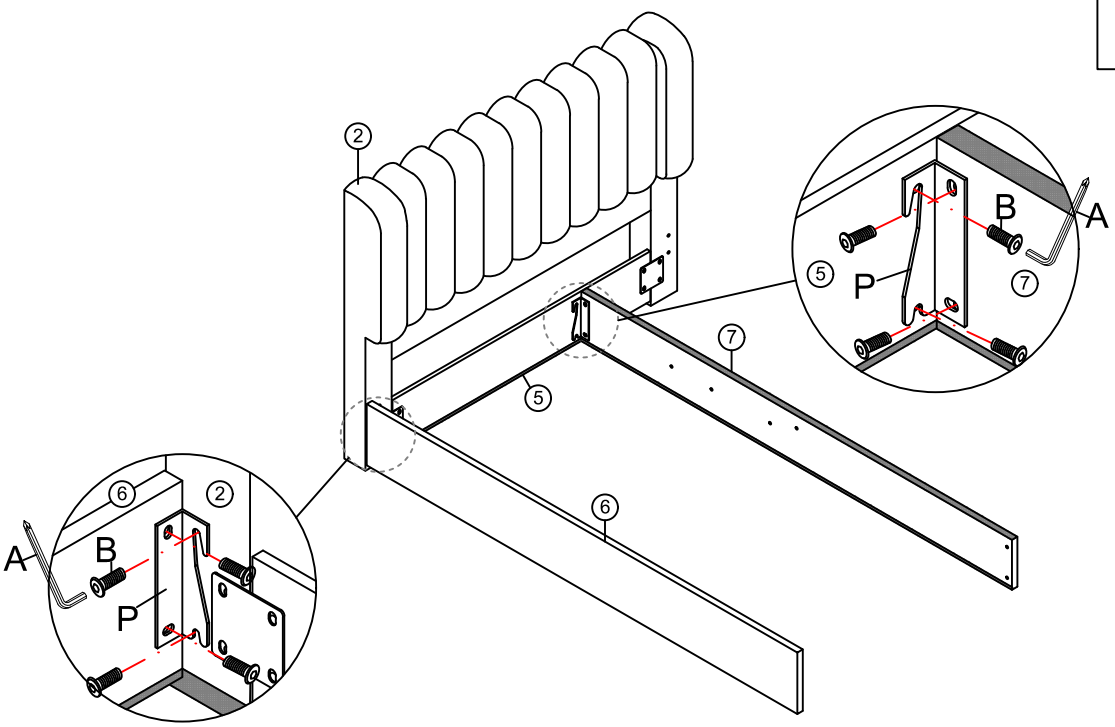

## Schritt 5:

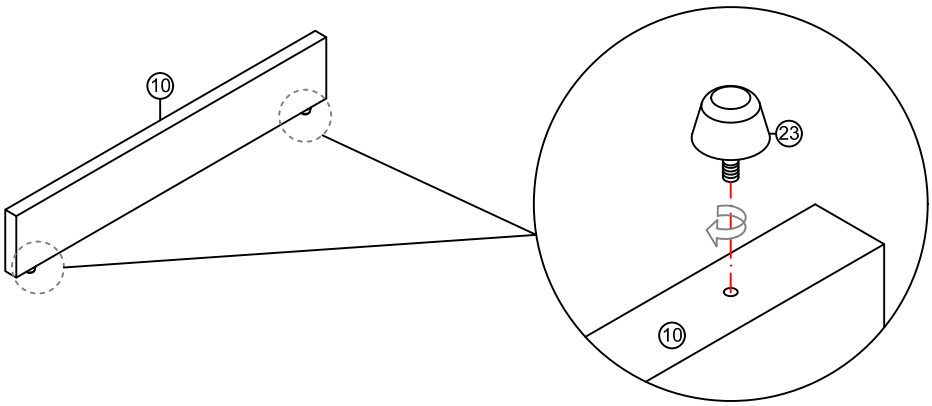


## Schritt 6:

| | | |
|---|---|---|
| A | | 1 |
| B | M8x18mm | 10 |
| P | | 1 |
| L | | 1 |
| O | | 1 |

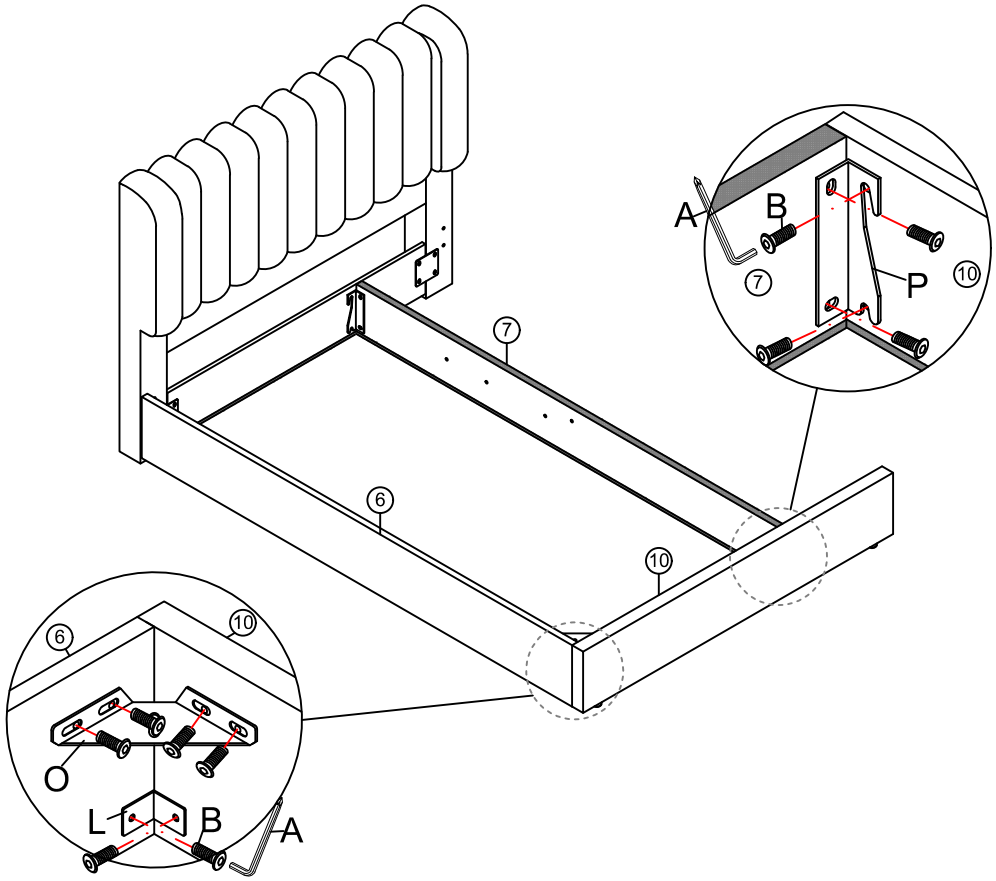

## Schritt 7:

| | | |
|---|---|---|
| A | | 1 |
| C | M8x45mm | 2 |

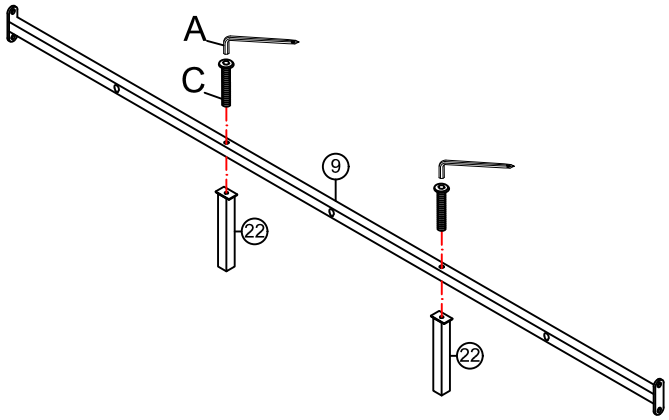


## Schritt 8:

| | | |
|---|---|---|
| A | | 1 |
| B | M8x18mm | 4 |

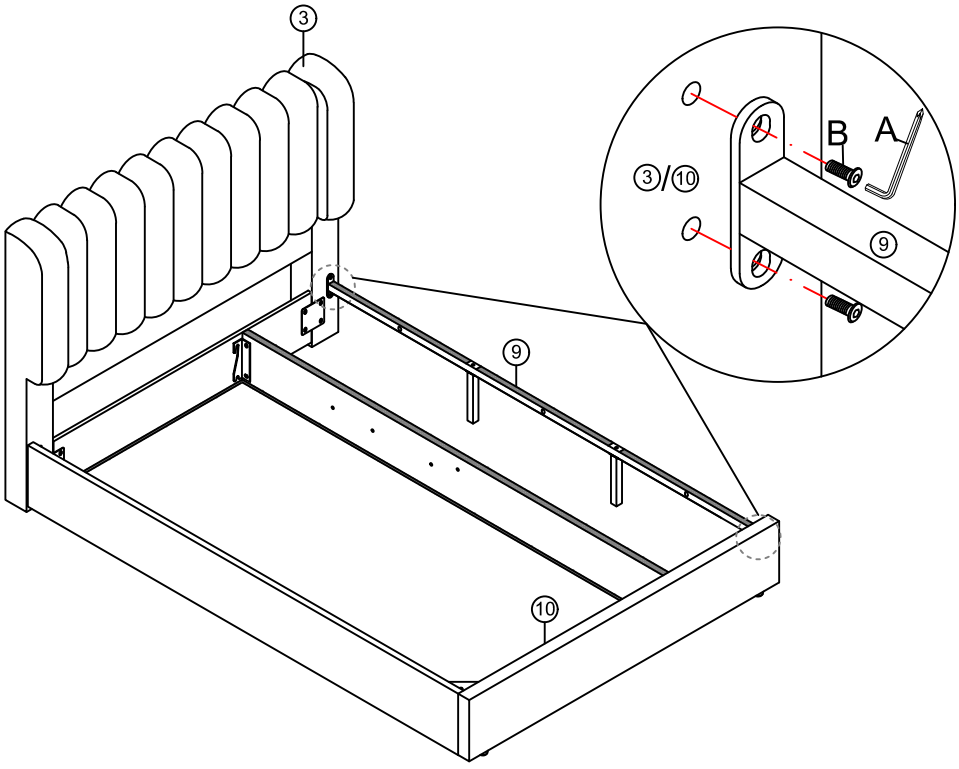

## Schritt 9:

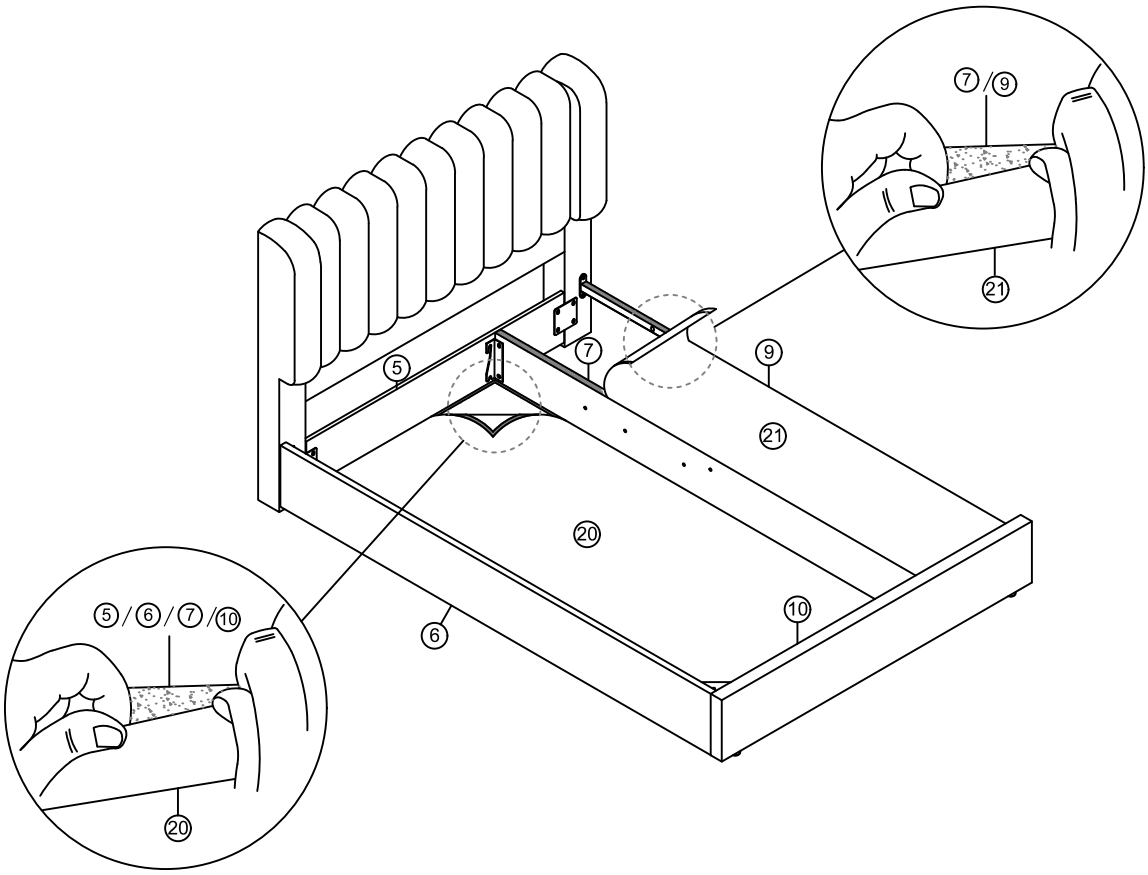


## Schritt 10:

| | | |
|---|---|---|
| A | | 1 |
| B | M8x18mm | 6 |
| G | | 4 |
| H | | 1 |

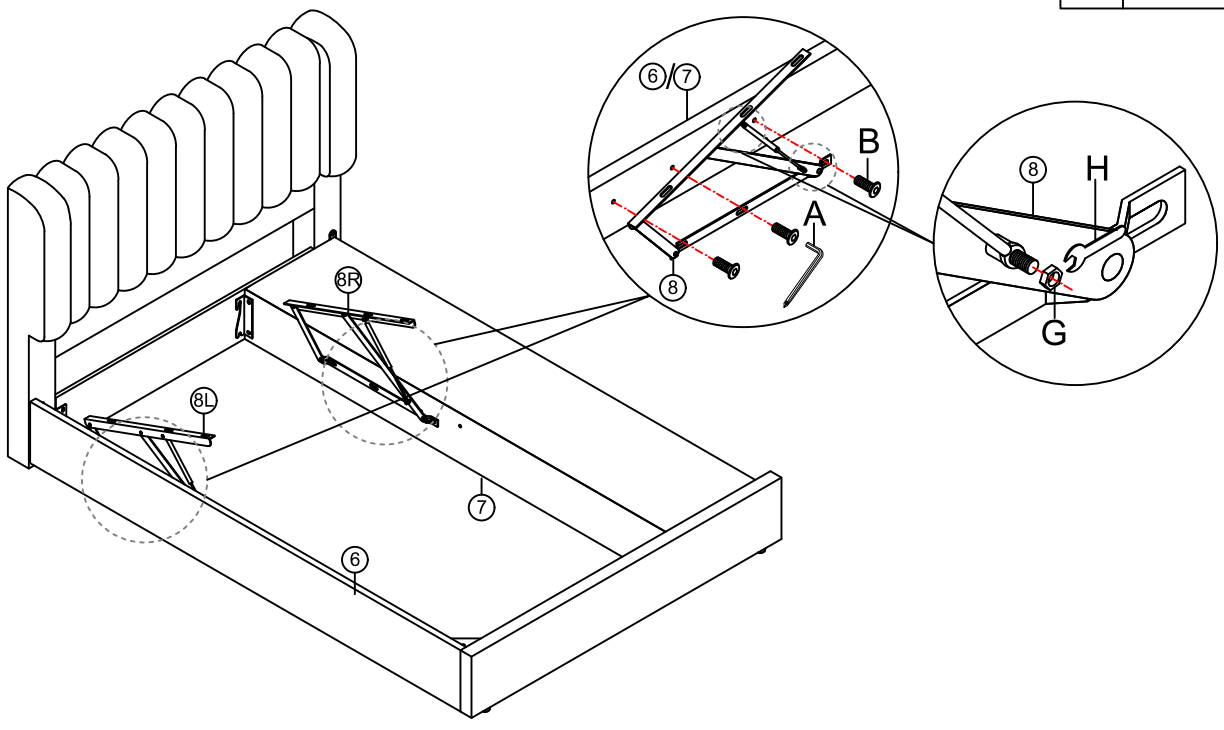

## Schritt 11:

| | | |
|---|---|---|
| A | | 1 |
| B | M8x18mm | 2 |

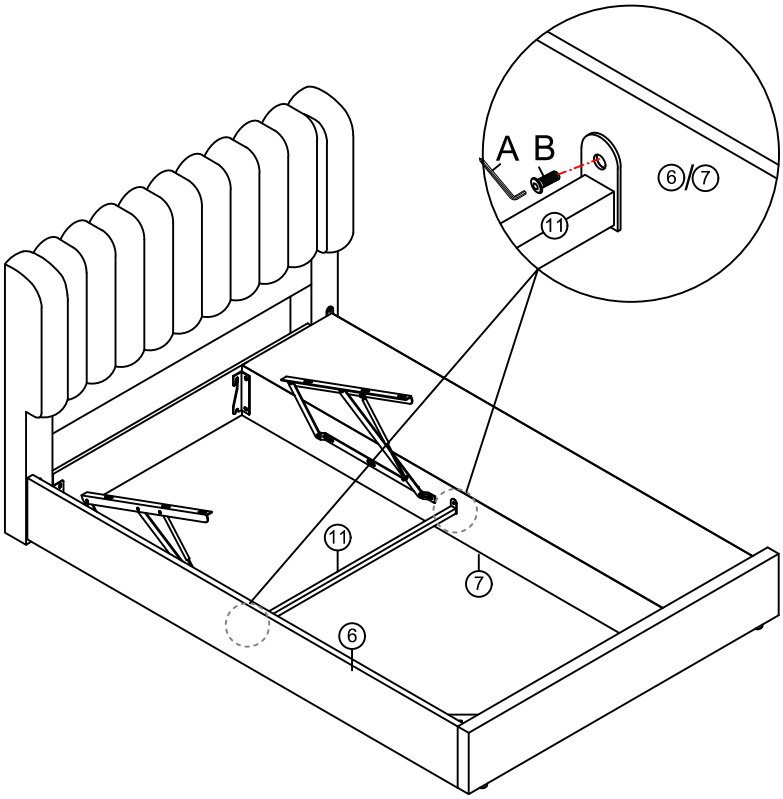


## Schritt 12:

| | | |
|---|---|---|
| A | | 1 |
| C | M8x45mm | 8 |
| F | | 8 |
| H | | 1 |

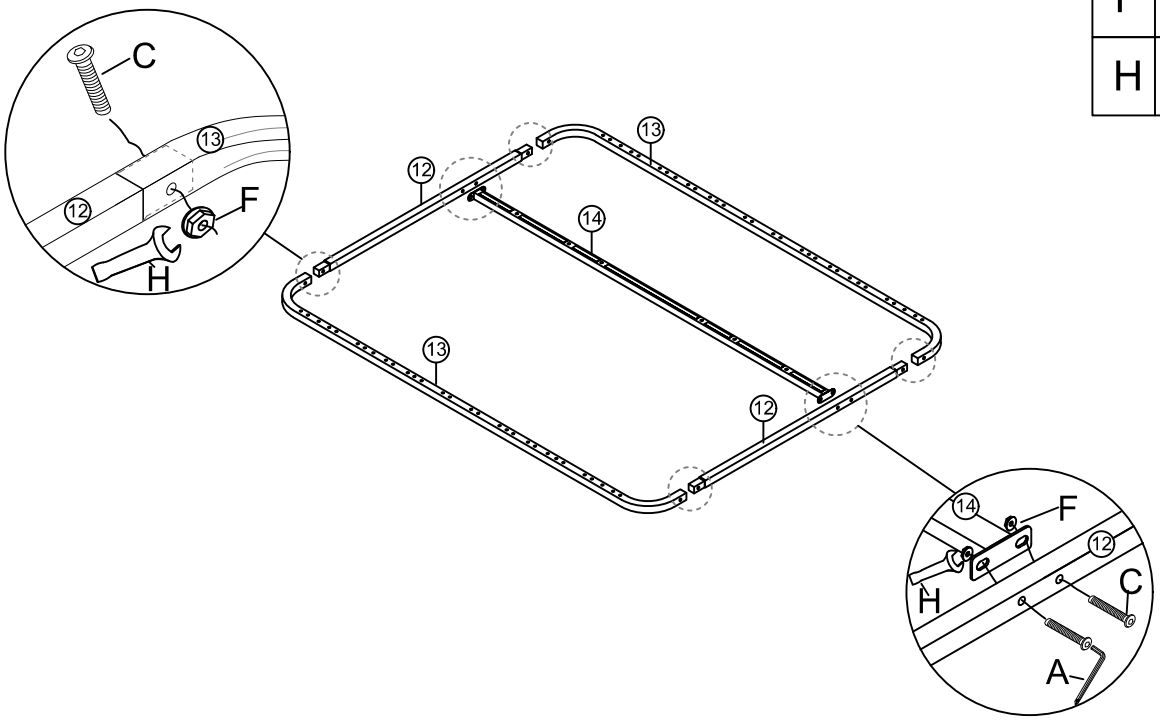

## Schritt 13:

| | | |
|---|---|---|
| A | | 1 |
| C | M8x45mm | 6 |
| F | | 6 |
| H | | 1 |

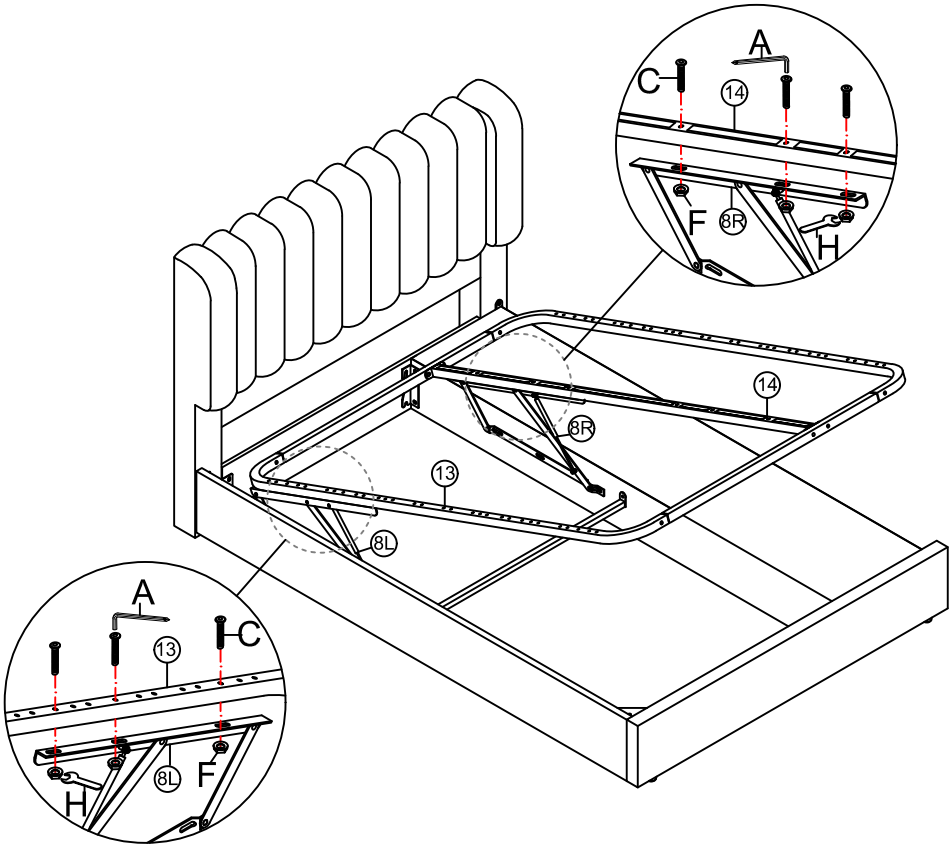


## Schritt 14:

| | | |
|---|---|---|
| M | | 1 |
| Q | | 24 |

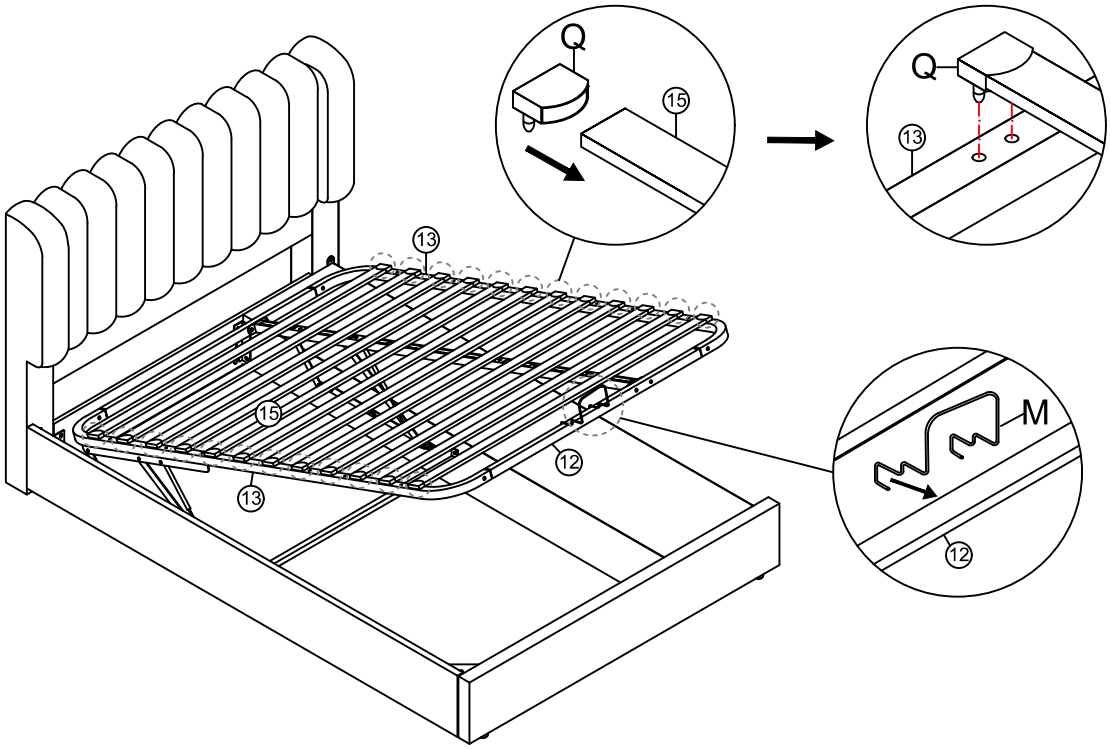

Schritt 15 **x3:**

| | | |
|---|---|---|
| A | | 1 |
| D | M6x15mm | 3 |
| E | M3x20mm | 24 |
| I | | 24 |
| J | | 24 |
| R | | 12 |

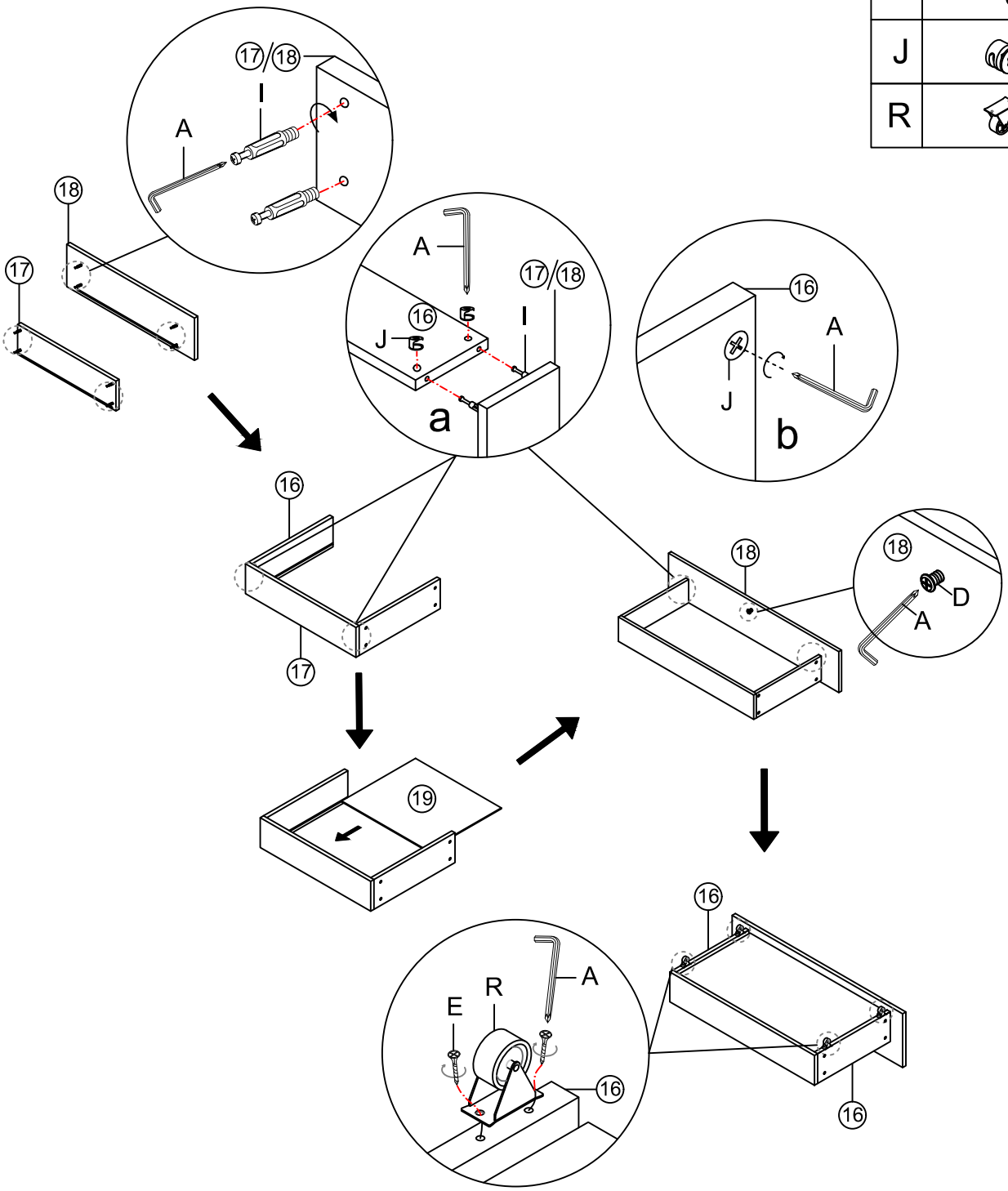

## Schritt 16:

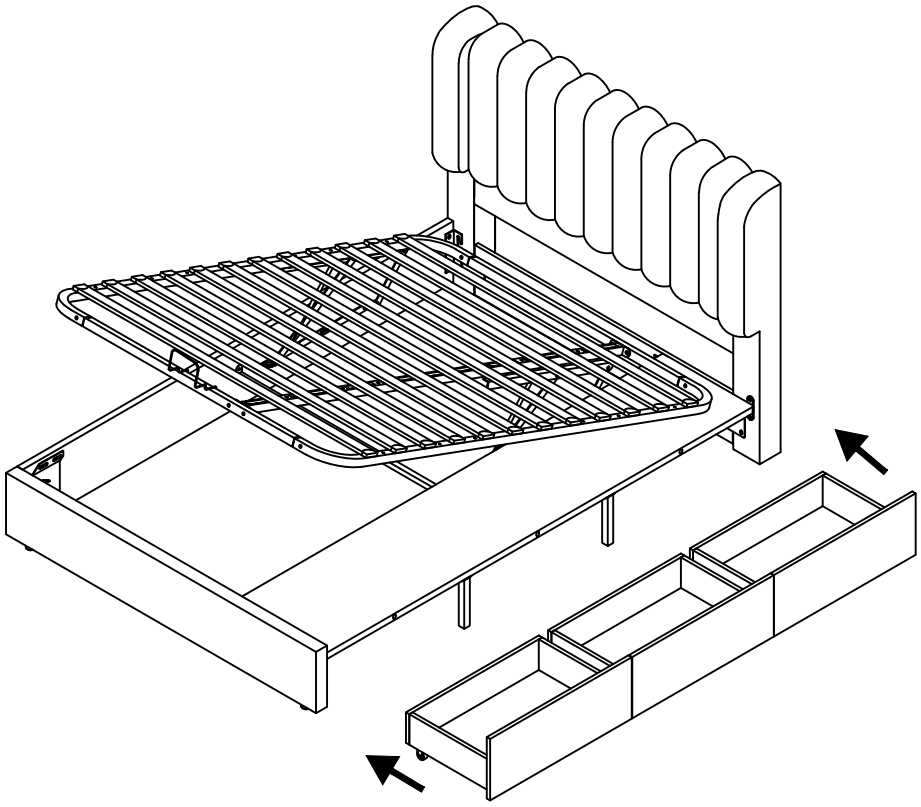

## Schritt 17:

| | | |
|---|---|---|
| S | | 1 |
| T | | 1 |

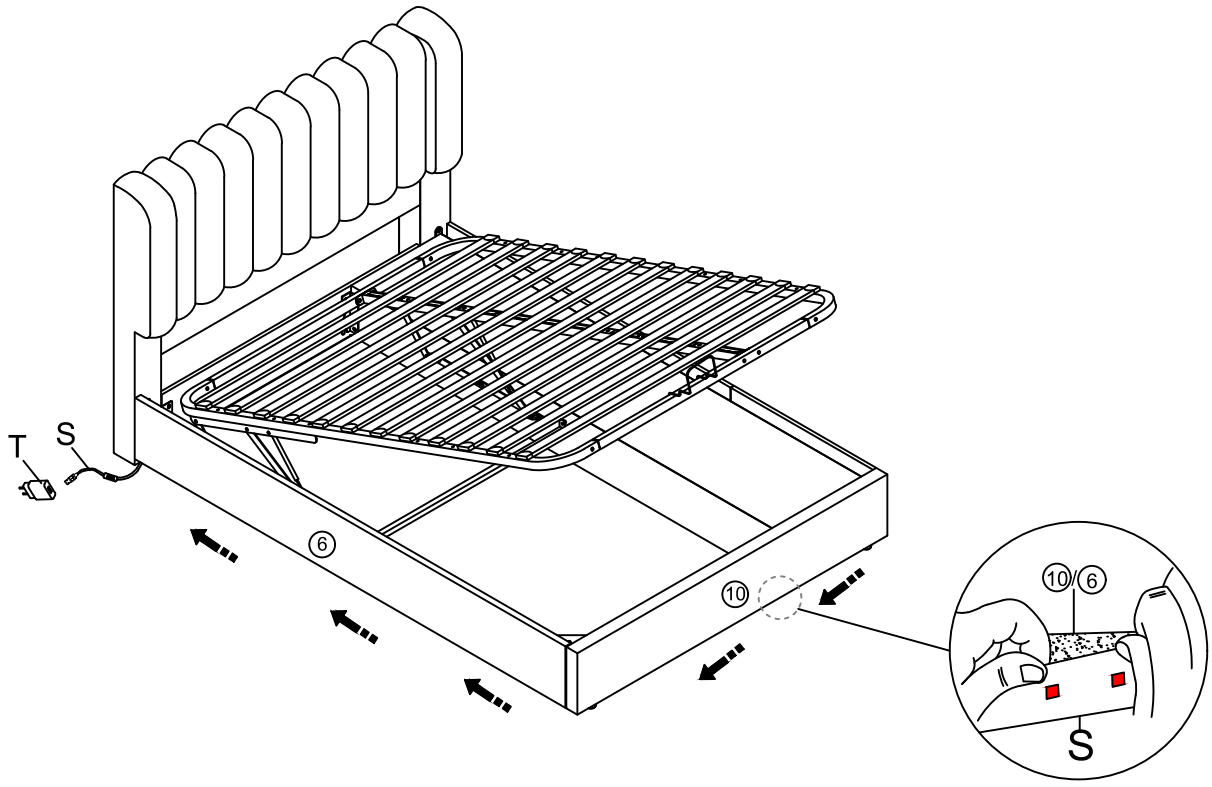

Schritt 18:

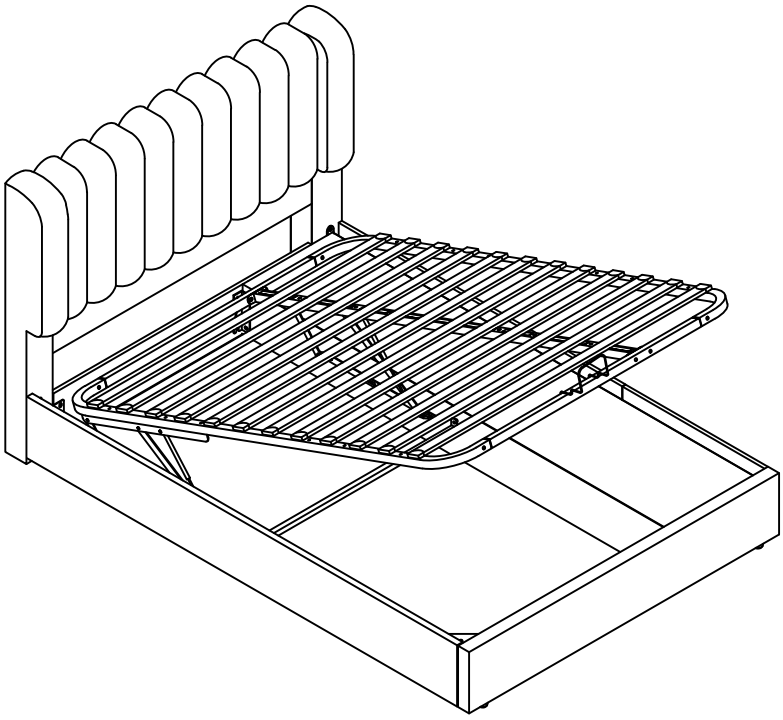

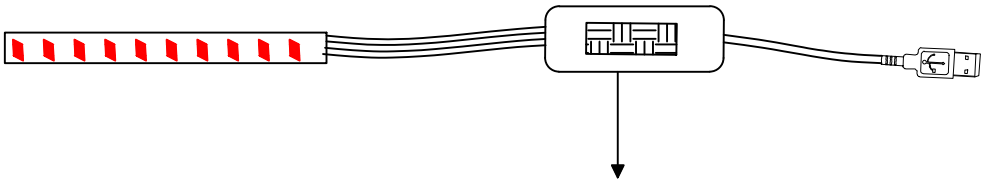

HINWEIS:
Hier können Sie den QR-Code scannen und eine App herunterladen, mit der Sie die Farbe des Lichtstreifens wie mit einer Fernbedienung steuern können. Wenn Ihr Telefon über die App Musik abspielt,ändert sich auch die Farbe des Lichtstreifens entsprechend der Stärke der Musik.

Verification of compliance Verification of compliance Verification of compliance

# Verification of Compliance

| | |
|---|---|
| *Verification No.:* | MK24030235P01-S01 |
| *Name and address of Applicant:* | **Shenzhen Hongzhengyu Technology Co., LTD**<br>Shenzhen baoan district rock street industrial science and technology industrial park of 2 Haitian lanyu 3 5 floor of A |
| *Name and address of Manufacturer:* | **Shenzhen Hongzhengyu Technology Co., LTD**<br>Shenzhen baoan district rock street industrial science and technology industrial park of 2 Haitian lanyu 3 5 floor of A |
| *Product name:* | **LED Lamp Strip** |
| *Rated：* | DC5V, 2A, Max.10W |
| *Product model(s):* | HZY-2835-120D-12V, HZY-2835-30D-5V, HZY-2835-60D-5V, HZY-2835-120D-5V, HZY-2835-60D-12V, HZY-2835-60D-24V, HZY-2835-120D-24V, HZY-2835RGB-60D-5V, HZY-2835RGB-60D-12V, HZY-5050-30D-5V, HZY-5050-60D-5V, HZY-5050-30D-12V, HZY-5050-60D-12V, HZY-5050-60D-24V, HZY-5050RGB-30D-5V, HZY-5050RGB-60D-5V, HZY-5050RGB-30D-12V,HZY-5050RGB-60D-12V, HZY-5050RGB-60D-24V |
| *Product trademark:* | N/A |

This verification confirms that the product meets the requirements of the following standard.
The conformity was demonstrated based on following standard(s) listed by European Commission as harmonized with LVD Directive 2014/35/EU.

EN IEC 60598-2-1:2021;
EN IEC 60598-1:2021+ A11:2022

*The verification has been carried out in accordance with individual rules and conditions agreed with the applicant. Evaluation has been carried out in accordance with:*

| | |
|---|---|
| *Test report(s) No.:* | MK24030235P01-S01 |
| *Test conducted by:* | TMC Testing Services (Shenzhen) Co., Ltd. |
| *Verification issue date:* | April 9, 2024 |

*Notes:*

*This verification refers to the above mentioned product and its conformity in regards of above mentioned standard(s) was proven on test sample.*

*This verification does not imply meeting all essential requirements, assessment of the series-production or any other restricted Notified Bodies conformity assessment procedure appropriate for the product.*

*This verification holder shall use this verification in connection to Verification of Compliance and technical data relevant for the product the verification was issued.*

**TMC Testing Services (Shenzhen) Co., Ltd.**
t:86-755-86642861 cert@tmc-lab.com www.tmc-lab.com
1/F., Block A, Xinshidai Gongrong Industrial Park, No. 2, Shihuan Road, Shilong Community, Shiyan Street, Baoan District, Shenzhen, China

Dawen Xu

**Lab Director**
Dawen Xu

Bauart geprüft TMC Product Safety Type approved

CE

Verification of compliance Verification of compliance Verification of compliance Verification of compliance

# Verification of Compliance

| | |
|---|---|
| *Verification No.:* | MK23020083-P01C01 |
| *Name and address of Applicant:* | **Shenzhen Hongzhengyu Technology Co., LTD**<br>Shenzhen baoan district rock street industrial science and technology industrial park of 2 Haitian lanyu 3 5 floor of A |
| *Name and address of Manufacturer:* | **Shenzhen Hongzhengyu Technology Co., LTD**<br>Shenzhen baoan district rock street industrial science and technology industrial park of 2 Haitian lanyu 3 5 floor of A |
| *Product name:* | **Lamp strip** |
| *Product model(s):* | HZY-2835-120D-12V, HZY-2835-30D-5V, HZY-2835-60D-5V, HZY-2835-120D-5V, HZY-2835-60D-12V, HZY-2835-60D-24V, HZY-2835-120D-24V, HZY-2835RGB-60D-5V, HZY-2835RGB-60D-12V, HZY-5050-30D-5V, HZY-5050-60D-5V, HZY-5050-30D-12V, HZY-5050-60D-12V, HZY-5050-60D-24V, HZY-5050RGB-30D-5V, HZY-5050RGB-60D-5V, HZY-5050RGB-30D-12V, HZY-5050RGB-60D-12V, HZY-5050RGB-60D-24V |
| *Product trademark:* | N/A |

This verification confirms that the product meets the requirements of the following standard.

The conformity was demonstrated based on following standard(s) listed by European Commission as harmonized with Directive RoHS 2.0 Directive (EU) 2015/863 and (EU)2017/2102 amending Annex II to Directive 2011/65/EU

| | |
|---|---|
| IEC 62321-1:2013 | IEC 62321-3-1:2013 |
| IEC 62321-4:2013/AMD1:2017 | IEC 62321-5:2013 |
| IEC 62321:6-2015 | IEC 62321-7-1:2015 |
| IEC 62321-7-2:2017 | IEC 62321-8:2017 |

*The verification has been carried out in accordance with individual rules and conditions agreed with the applicant. Evaluation has been carried out in accordance with:*

| | |
|---|---|
| *Test report(s) No.:* | MK23020083-P01C01 |
| *Test conducted by:* | TMC Testing Services (Shenzhen) Co., Ltd. |
| *Verification issue date:* | February 25, 2023 |

*Notes:*

*This verification refers to the above mentioned product and its conformity in regards of above mentioned standard(s) was proven on test sample.*

*This verification does not imply meeting all essential requirements, assessment of the series-production or any other restricted Notified Bodies conformity assessment procedure appropriate for the product.*

*This verification holder shall use this verification in connection to verification of conformity and technical data relevant for the product the verification was issued.*

**TMC Testing Services (Shenzhen) Co., Ltd.**

t:86-755-86642861 cert@tmc-lab.com www.tmc-lab.com

1st Floor, Block A1, Zone A, Xinshidai Gongrong Industrial Park, No. 2, Shihuan Road, Shiyan Street, Baoan District, Shenzhen, China

Bauart geprüft TMC Product Safety

Lab Vivian Jiang

Verification of Compliance Verification of Compliance Verification of Compliance

# Verification of Compliance

| | |
|---|---|
| *Verification No.:* | MK23020083-P01E01 |
| *Name and address of Applicant:* | **Shenzhen Hongzhengyu Technology Co., LTD**<br>Shenzhen baoan district rock street industrial science and technology industrial park of 2 Haitian lanyu 3 5 floor of A |
| *Name and address of Manufacturer* | **Shenzhen Hongzhengyu Technology Co., LTD**<br>Shenzhen baoan district rock street industrial science and technology industrial park of 2 Haitian lanyu 3 5 floor of A |
| *Product name:* | **Lamp strip** |
| *Rated:* | 5V ⎓ 1A |
| *Product model(s):* | HZY-2835-120D-12V, HZY-2835-30D-5V, HZY-2835-60D-5V, HZY-2835-120D-5V, HZY-2835-60D-12V, HZY-2835-60D-24V, HZY-2835-120D-24V, HZY-2835RGB-60D-5V, HZY-2835RGB-60D-12V, HZY-5050-30D-5V, HZY-5050-60D-5V, HZY-5050-30D-12V, HZY-5050-60D-12V, HZY-5050-60D-24V, HZY-5050RGB-30D-5V, HZY-5050RGB-60D-5V, HZY-5050RGB-30D-12V, HZY-5050RGB-60D-12V, HZY-5050RGB-60D-24V |
| *Product trademark:* | N/A |

This verification confirms that the product meets the requirements of the following standard.

The conformity was demonstrated based on following standard(s) listed by European Commission as harmonized with EMC Directive 2014/30/EU.

EN IEC 55015:2019+A11:2020

IEC 61547:2020

*The verification has been carried out in accordance with individual rules and conditions agreed with the applicant. Evaluation has been carried out in accordance with:*

| | |
|---|---|
| *Test report(s) No.:* | MK23020083-P01E01 |
| *Test conducted by:* | TMC Testing Services (Shenzhen) Co., Ltd. |
| *Verification issue date:* | February 25, 2023 |

*Notes:*

*This verification refers to the above mentioned product and its conformity in regards of above mentioned standard(s) was proven on test sample.*

*This verification does not imply meeting all essential requirements, assessment of the series-production or any other restricted Notified Bodies conformity assessment procedure appropriate for the product.*

*This verification holder shall use this verification in connection to verification of conformity and technical data relevant for the product the verification was issued.*

**TMC Testing Services (Shenzhen) Co., Ltd.**

t:86-755-86642861 cert@tmc-lab.com www.tmc-lab.com

1st Floor, Block A1, Zone A, Xinshidai Gongrong Industrial Park, No. 2, Shihuan Road, Shiyan Street, Baoan District, Shenzhen, China

Bauart geprüft TMC Access to global market Product Safety approved

**Lab**

Vivian Jiang

CE

Certificate – Сертификат – 證明書 – Certificat – 증명서 – شهادة

Shenzhen ZKT Technology Co., Ltd.
1/F, No. 101, Building B, No. 6, Tangwei Community Industrial Avenue,
Fuhai Street, Bao'an District, Shenzhen, China

# Certificate of Compliance

**Certificate Number: ZKT-25070215182C**

| | | |
|---|---|---|
| **Certificate's Holder** | : | **Dongguan Yihong Hardware Electronics Co., Ltd Room 1106, No.2, Shangheng Road, Chang'an Town, Dongguan** |
| **Manufacturer** | : | **Dongguan Yihong Hardware Electronics Co., Ltd Room 1106, No.2, Shangheng Road, Chang'an Town, Dongguan** |
| **Trade Mark** | : | **N/A** |
| **Product** | : | **LED controller** |
| **Model(s)** | : | **YH-6183 YH-252, YH-284, YH-290, YH-287, YH-358, YH-360, YH-6180, YH-6184** |

| Requirement | Standard | Report No. |
|---|---|---|
| Art.3.1(a) Safety | EN IEC 62368-1:2024+A11:2024 | ZKT-25070215183S |
| Art.3.1(a) Health | EN IEC 62311:2020<br>EN 50665:2017 | ZKT-25070215182E-1 |
| Art.3.1(b) EMC | ETSI EN 301 489-1 V2.2.3 (2019-11)<br>ETSI EN 301 489-17 V3.3.0 (2024-07) | ZKT-25070215182E-2 |
| Art.3.2 Radio | ETSI EN 300 328 V2.2.2 (2019-07) | ZKT-25070215182E-3 |

This Attestation of Compliance is issued on a voluntary basis for electrical equipment below the voltage limits of Radio Equipment Directive (RED) 2014/53/EU. The essential requirement are fulfilled accordingly based on the technical specifications applicable at the time of issuance.

CE

Shenzhen ZKT Technology Co., Ltd.
APPROVED
Manager
Jul. 07, 2025

This Certificate of Conformity is based on single evaluation of the submitted sample(s) of the above mentioned product. It does not imply an assessment of the whole product and relevant . Directives to be observed.

精准检测
PRECISE TESTING

# CERTIFICATE OF CONFORMITY

**No.: PTC25102309602C-EN01V01**

| | | |
|---|---|---|
| **Applicant** | : | **Dongguan Yihong Hardware electronics Co., LTD** |
| **Address** | : | **Room 901, No. 2, Shangheng Road, Chang'an Town, Dongguan City, Guangdong Province, 523880 China** |
| **Manufacturer** | : | **Dongguan Yihong Hardware electronics Co., LTD** |
| **Address** | : | **Room 901, No. 2, Shangheng Road, Chang'an Town, Dongguan City, Guangdong Province, 523880 China** |
| **Product Name** | : | **LED Controler** |
| **Model No.** | : | **YH-289,YH-980 ,YH-918 ,YH-917 ,YH-818,YH-816,YH-6181,YH-358** |

The submitted sample of the above equipment has been tested and found to comply with the following European Directive:

**RoHS Directive 2011/65/EU & EU No.2015/863**

The standard(s) used for showing compliance with the essential requirements:

| Applicable Standard(s) | Test Report(s) Number |
|---|---|
| **IEC 62321-1:2013, IEC 62321-2:2021<br>IEC 62321-3-1:2013, IEC 62321-3-2:2020<br>IEC62321-4: 2013+AMD1:2017<br>IEC 62321-5:2013<br>IEC 62321-6:2015, IEC 62321-7-1: 2015<br>IEC 62321-7-2: 2017, IEC 62321-8:2017** | **PTC25102309602C-EN01V01** |

This certificate is part of the full test report(s) and should be read in conjunction with it. This certificate is based on an evaluation of one sample of above mentioned product. It does not imply assessment of the production of the product. Without the written approval of Precise Testing & Certification (Guangdong) Co., Ltd., this certificate is not permitted to be reproduced, except in full. It is not permitted to use the test lab's logo.

**RoHS**

PRECISE TESTING & CERTIFICATION (GUANGDONG) CO., LTD.

**Jacky Ou**
**Manager**
**Date:Dec. 04, 2025**

Precise Testing & Certification (Guangdong) Co., Ltd.
Building 1, No.6, Tongxin Road, Dongcheng Street,
Dongguan, Guangdong, China
Tel: 86 769 38808222 Web:www.ptc-testing.com
Mail: inquiry@ptc-testing.com

CE

# CERTIFICATE OF CONFORMITY

## Low Voltage Directive 2014/35/EU

This Certificate of Conformity is hereby issued to the product designated below:

| | |
|---|---|
| **Certificate No. ..... :** | 24SP01101L01 |
| **Report No. ..... :** | SP2401101L01 |
| **Date Issue. ..... :** | 2024-04-26 |
| **Applicant's name ..... :** | Guangdong Sangu Technology Co., Ltd |
| **Address ..... :** | 402, Chuangye building, 8-28, Shaqi community Central Road, Xinqiao street, Bao'an District, Shenzhen. |
| **Manufacturer's name ..... :** | Guangdong Sangu Technology Co., Ltd |
| **Address ..... :** | 402, Chuangye building, 8-28, Shaqi community Central Road, Xinqiao street, Bao'an District, Shenzhen. |
| **Product Description ..... :** | POWER ADAPTER |
| **Model(s)/Type References :** | SG-050yyyyz, GA-050yyyyz, GAT-050yyyyz, HZ-050yyyyz, SG-050yyyyAz, GA-050yyyyAz, GAT-050yyyyAz, HZ-050yyyyAz, SG-050yyyyAzC, GA-050yyyyAzC, GAT-050yyyyAzC, HZ-050yyyyAzC, SG-xxxyyyy12Az (xxx, yyyy, z are variables, see table A for details) |
| **Parameters ..... :** | Input: 100-240V~, 50/60Hz, 0.3A Max. (For models SG-050yyyyz, GA-050yyyyz, GAT-050yyyyz, HZ-050yyyyz, SG-050yyyyAz, GA-050yyyyAz, GAT-050yyyyAz, HZ-050yyyyAz, SG-050yyyyAzC, GA-050yyyyAzC, GAT-050yyyyAzC, HZ-050yyyyAzC)<br>Input: 100-240V~, 50/60Hz, 0.6A Max. (For models SG-xxxyyyy12Az)<br>Output: See table B for details |
| **Standard(s) ..... :** | EN IEC 62368-1:2020/A11:2020 |

On the basis of the referenced test report(s), sample(s) tested of the above product have been found to comply with the standards harmonized with the directives listed on this verification at the time the tests were carried out. Other standards and Directives may be relevant to the product. This verification is part of the full test report(s) and should be read in conjunction with it(them).

Once compliance with all product relevant CE mark directives are verified, including any relevant e.g. risk assessment and production control, the manufacturer may indicate compliance by signing a Declaration of Conformity themselves and applying the mark to products identical to the tested sample(s)

Approved By

Eric Liu

Director of engineering department

**Dongguan Pubiao Testing Technology Co., Ltd**
No. 3, 1/F., Building A, No.30, Minghua Road, Juzhou, Shijie, Dongguan, Guangdong, China.
Tel: +86 769 81813516 E-mail: service@pubiaotest.com Web: www.pubiaotest.com

CE

# CERTIFICATE OF CONFORMITY

## Low Voltage Directive 2014/35/EU

### Appendix of Certificate No.: 24SP01101L01

**Model Description:**

**Table A: Definition of variables**

| Variable | Range of variable | Content |
|---|---|---|
| xxx | 050-240 | 3 digits, indicates 10 times of output voltage in V and in step of 0.1V. eg. 050=5.0V, 240=24.0V. |
| yyyy | 0100-2100 | 4 digits, indicates 1000 times of output current in A and in step of 0.01A. eg. 0100=0.1A, 2100=2.1A. |
| z | E, B | One capital letter representing the plug type for different countries.<br>E represents European plug and Russian plug;<br>B represents British plug. |

DongGuan PuBiao Testing Technology Co., Ltd * CERTIFICATE *

**DongGuan PuBiao Testing Technology Co., Ltd**
No. 3, 1/F., Building A, No.30, Minghua Road, Juzhou, Shijie, Dongguan, Guangdong, China.
Tel: +86 769 81813516 E-mail: service@pubiaotest.com Web: www.pubiaotest.com

CE

# CERTIFICATE OF CONFORMITY

## Low Voltage Directive 2014/35/EU

### Appendix of Certificate No.: 24SP01101L01

**Table B: Model list and output ratings:**

| Model | Output voltage (Vdc) | Output current (A) | Max Power (W) | Transformer |
|---|---|---|---|---|
| SG-050yyyyz,<br>GA-050yyyyz,<br>GAT-050yyyyz,<br>HZ-050yyyyz,<br>SG-050yyyyAz,<br>GA-050yyyyAz,<br>GAT-050yyyyAz,<br>HZ-050yyyyAz,<br>SG-050yyyyAzC,<br>GA-050yyyyAzC,<br>GAT-050yyyyAzC,<br>HZ-050yyyyAzC | 5.0 | 0.10-2.0 | 10.0 | EF1510 |
| SG-xxxyyyy12Az | 5.0-5.5 | 0.10-2.1 | 11.55 | |
| | 5.6-12.0 | 0.10-2.0 | 12.00 | |
| | 12.1-24.0 | 0.10-1.0 | 12.00 | EF1510-1 |

Remark:

1) The rated output voltage is rising from 5.0V and in steps of 0.1V.
2) The rated output current is rising from 0.1A and in steps of 0.01A, but not more than the indicated max o/p current.
3) Actual output current depends on range of output voltage. The max. Output current multiplied by output voltage cannot exceed the max. Output power.

DongGuan PuBiao Testing Technology Co., Ltd * CERTIFICATE *

**DongGuan PuBiao Testing Technology Co., Ltd**
No. 3, 1/F., Building A, No.30, Minghua Road, Juzhou, Shijie, Dongguan, Guangdong, China.
Tel: +86 769 81813516 E-mail: service@pubiaotest.com Web: www.pubiaotest.com

# RoHS

# CERTIFICATE OF CONFORMITY

**RoHS Directive (EU) 2015/863 amending Annex II to Directive 2011/65/EU**

This Certificate of Conformity is hereby issued to the product designated below:

| | |
|---|---|
| **Certificate No.....:** | 24CP01101R01 |
| **Report No.....:** | CP2401101R01 |
| **Date Issue.....:** | 2024-05-06 |
| **Applicant's name.....:** | Guangdong Sangu Technology Co., Ltd |
| **Address.....:** | 402, Chuangye building, 8-28, Shaqi community Central Road, Xinqiao street, Bao'an District, Shenzhen. |
| **Manufacturer's name.....:** | Same as applicant |
| **Address.....:** | Same as applicant |
| **Product Description .....:** | POWER ADAPTER |
| **Model(s)/Type References :** | SG-050yyyyz,GA-050yyyyz, GAT-050yyyyz, HZ-050yyyyz, SG-050yyyyAz, GA-050yyyyAz,GAT-050yyyyAz,HZ-050yyyyAz,SG-050yyyyAzC, GA-050yyyyAzC,GAT-050yyyyAzC,HZ-050yyyyAzC,SG-xxxyyyy12Az (xxx, yyyy, z are variables, see table A for details) |
| **Conclusion .....:** | Based on the performed tests on submitted sample(s), the results of Lead, Mercury, Cadmium, Hexavalent chromium, Polybrominated biphenyls (PBBs), Polybrominated diphenyl ethers (PBDEs) and Phthalates such as Bis(2-ethylhexyl) phthalate (DEHP) , Butyl benzyl phthalate (BBP), Dibutyl phthalate (DBP) , and Diisobutyl phthalate (DIBP) comply with the limits as set by RoHS Directive (EU) 2015/863 amending Annex II to Directive 2011/65/EU. |
| **Standard(s).....:** | IEC 62321-4:2013+A1:2017; IEC 62321-5:2013<br>IEC 62321-7-1:2015; IEC 62321-7-2:2017<br>IEC 62321-6:2015; IEC 62321-8:2017 |

On the basis of the referenced test report(s), sample(s) tested of the above product have been found to comply with the standards harmonized with the directives listed on this verification at the time the tests were carried out. Other standards and Directives may be relevant to the product. This verification is part of the full test report(s) and should be read in conjunction with it(them).

Once compliance with all product relevant CE mark directives are verified, including any relevant e.g. risk assessment and production control, the manufacturer may indicate compliance by signing a Declaration of Conformity themselves and applying the mark to products identical to the tested sample(s).

Approved By

Eric Liu

Director of engineering department

Dongguan PuBiao Testing Technology Co., Ltd.

Dongguan Pubiao Testing Technology Co., Ltd.
No. 3, 1/F., Building A, No.30, Minghua Road, Juzhou, Shijie, Dongguan, Guangdong, China.
Tel: +86 769 81813516 E-mail: service@pubiaotest.com Web: www.pubiaotest.com

# CERTIFICATE OF CONFORMITY

**RoHS Directive (EU) 2015/863 amending Annex II to Directive 2011/65/EU**

## Appendix of Certificate No.: 24CP01101R01

**Model Description:**

**Table A: Definition of variables**

| Variable | Range of variable | Content |
|---|---|---|
| xxx | 050-240 | 3 digits, indicates 10 times of output voltage in V and in step of 0.1V. eg. 050=5.0V, 240=24.0V. |
| yyyy | 0100-2100 | 4 digits, indicates 1000 times of output current in A and in step of 0.01A. eg. 0100=0.1A, 2100=2.1A. |
| z | E, B | One capital letter representing the plug type for different countries.<br>E represents European plug and Russian plug;<br>B represents British plug. |

Dongguan Pubiao Testing Technology Co., Ltd.
No. 3, 1/F., Building A, No.30, Minghua Road, Juzhou, Shijie, Dongguan, Guangdong, China.
Tel: +86 769 81813516 E-mail: service@pubiaotest.com Web: www.pubiaotest.com

# RoHS

# CERTIFICATE OF CONFORMITY

**RoHS Directive (EU) 2015/863 amending Annex II to Directive 2011/65/EU**

## Appendix of Certificate No.: 24CP01101R01

**Table B: Model list and output ratings:**

| Model | Output voltage (Vdc) | Output current (A) | Max Power (W) | Transformer |
|---|---|---|---|---|
| SG-050yyyyz,<br>GA-050yyyyz,<br>GAT-050yyyyz,<br>HZ-050yyyyz,<br>SG-050yyyyAz,<br>GA-050yyyyAz,<br>GAT-050yyyyAz,<br>HZ-050yyyyAz,<br>SG-050yyyyAzC,<br>GA-050yyyyAzC,<br>GAT-050yyyyAzC,<br>HZ-050yyyyAzC | 5.0 | 0.10-2.0 | 10.0 | EF1510 |
| SG-xxxyyyy12Az | 5.0-5.5 | 0.10-2.1 | 11.55 | |
| | 5.6-12.0 | 0.10-2.0 | 12.00 | |
| | 12.1-24.0 | 0.10-1.0 | 12.00 | EF1510-1 |

Remark:

1) The rated output voltage is rising from 5.0V and in steps of 0.1V.
2) The rated output current is rising from 0.1A and in steps of 0.01A, but not more than the indicated max o/p current.
3) Actual output current depends on range of output voltage. The max. Output current multiplied by output voltage cannot exceed the max. Output power.

Dongguan Pubiao Testing Technology Co., Ltd. * CERTIFICATE *

Dongguan Pubiao Testing Technology Co., Ltd.
No. 3, 1/F., Building A, No.30, Minghua Road, Juzhou, Shijie, Dongguan, Guangdong, China.
Tel: +86 769 81813516 E-mail: service@pubiaotest.com Web: www.pubiaotest.com

# CERTIFICATE OF CONFORMITY

## Electromagnetic Compatibility (EMC) Directive 2014/30/EU

This Certificate of Conformity is hereby issued to the product designated below:

| | |
|---|---|
| **Certificate No.** : | 24EP01101E01 |
| **Report No.** : | EP2401101E01 |
| **Date Issue.** : | 2024-04-28 |
| **Applicant's name** : | Guangdong Sangu Technology Co., Ltd |
| **Address** : | 402, Chuangye building, 8-28, Shaqi community Central Road, Xinqiao street, Bao'an District, Shenzhen. |
| **Manufacturer's name** : | Guangdong Sangu Technology Co., Ltd |
| **Address** : | 402, Chuangye building, 8-28, Shaqi community Central Road, Xinqiao street, Bao'an District, Shenzhen. |
| **Product Description** : | POWER ADAPTER |
| **Model(s)/Type References** : | SG-050yyyyz, GA-050yyyyz, GAT-050yyyyz, HZ-050yyyyz, SG-050yyyyAz, GA-050yyyyAz, GAT-050yyyyAz, HZ-050yyyyAz, SG-050yyyyAzC, GA-050yyyyAzC, GAT-050yyyyAzC, HZ-050yyyyAzC, SG-xxxyyyy12Az (xxx, yyyy, z are variables, appendix for details) |
| **Parameters** : | See appendix for details |
| **Standard(s)** : | EN 55032:2015+A11:2020+A1:2020<br>EN 55035:2017+A11:2020<br>EN IEC 61000-3-2:2019+A1:2021<br>EN 61000-3-3:2013+A1:2019+A2:2021 |

On the basis of the referenced test report(s), sample(s) tested of the above product have been found to comply with the standards harmonized with the directives listed on this verification at the time the tests were carried out. Other standards and Directives may be relevant to the product. This verification is part of the full test report(s) and should be read in conjunction with it(them).

Once compliance with all product relevant CE mark directives are verified, including any relevant e.g. risk assessment and production control, the manufacturer may indicate compliance by signing a Declaration of Conformity themselves and applying the mark to products identical to the tested sample(s).

Approved By

Eric Liu

Director of engineering department

**Dongguan Pubiao Testing Technology Co., Ltd**

No. 3, 1/F., Building A, No.30, Minghua Road, Juzhou, Shijie, Dongguan, Guangdong, China

Tel: +86 769 81813516 E-mail: service@pubiaotest.com Web: www.pubiaotest.com

# CERTIFICATE OF CONFORMITY

## Electromagnetic Compatibility (EMC) Directive 2014/30/EU

### Appendix of Certificate No.: 24EP01101E01

**Table A: Definition of variables**

| Variable | Range of variable | Content |
|---|---|---|
| xxx | 050-240 | 3 digits, indicates 10 times of output voltage in V and in step of 0.1V. eg. 050=5.0V, 240=24.0V. |
| yyyy | 0100-2100 | 4 digits, indicates 1000 times of output current in A and in step of 0.01A. eg. 0100=0.1A, 2100=2.1A. |
| z | E, B | One capital letter representing the plug type for different countries.<br>E represents European plug and Russian plug;<br>B represents British plug. |

**Table B: Model list and input / output ratings**

| Model | Rated intput | Rated output | | | Transformer |
|---|---|---|---|---|---|
| | | Voltage range (VDC) | Current range (A) | Max. Power (W) | |
| SG-050yyyyz,<br>GA-050yyyyz,<br>GAT-050yyyyz,<br>HZ-050yyyyz,<br>SG-050yyyyAz,<br>GA-050yyyyAz,<br>GAT-050yyyyAz,<br>HZ-050yyyyAz,<br>SG-050yyyyAzC,<br>GA-050yyyyAzC,<br>GAT-050yyyyAzC,<br>HZ-050yyyyAzC, | 100-240V~,<br>50/60Hz, 0.3A<br>Max. | 5.0 | 0.1-2.0 | 10.0 | EF1510 |
| SG-xxxyyyy12Az | 100-240V~,<br>50/60Hz, 0.6A<br>Max. | 5.0-5.5 | 0.10-2.1 | 11.55 | |
| | | 5.6-12.0 | 0.10-2.0 | 12.00 | |
| | | 12.1-24.0 | 0.10-1.0 | 12.00 | EF1510-1 |

Dongguan Pubiao Testing Technology Co., Ltd. * CERTIFICATE *

**Dongguan Pubiao Testing Technology Co., Ltd**
No. 3, 1/F., Building A, No.30, Minghua Road, Juzhou, Shijie, Dongguan, Guangdong, China
Tel: +86 769 81813516 E-mail: service@pubiaotest.com Web: www.pubiaotest.com

| | |
|---|---|
| Importeur | Decobus Handel GmbH |
| Adresse | Innungsstraße 9, 21244 Buchholz,Deutschland |
| Email/URL | https://www.decobusgroup.de |
| Hersteller | Shenzhen Hongzhengyu Technology Co., LTD |
| Adresse | Shenzhen baoan district rock street industrial science and technology industrial park of 2 Haitian lanyu 3 5 floor of A |
| Email/URL | https://aoligd.1688.com/ |
| Partienummer | HZY-5050RGB-30D-5V |
| Hergestellt in | China |
| EC REP | Decobus Handel GmbH<br>Innungsstraße 9, 21244 Buchholz,Deutschland<br>www.decobusgroup.de |

Product Name:LED light strip
Model:HZY-5050RGB-30D-5V
Rated voltage:DC5V
Rated frequency:50-60HZ
Power:5W/M

| | |
|---|---|
| Importeur | Decobus Handel GmbH |
| Adresse | Innungsstraße 9, 21244 Buchholz,Deutschland |
| Email/URL | https://www.decobusgroup.de |
| Hersteller | Guangdong sangu Technology Co., LTD |
| Adresse | 402 Chuangye building,8-28,Shaqi community Central Road,Xinqiao street Bao'an District,Shenzhen |
| Email/URL | https://aoligd.1688.com/ |
| Partienummer | SG- 0503000AE |
| Hergestellt in | China |
| EC REP | Decobus Handel GmbH<br>Innungsstraße 9, 21244 Buchholz,Deutschland<br>www.decobusgroup.de |

Product Name:Power Adapter
Model:SG- 0503000AE
Rated voltage:DC5V
Rated frequency:50-60HZ
Power:15W

| | |
|---|---|
| Importeur | Decobus Handel GmbH |
| Adresse | Innungsstraße 9, 21244 Buchholz,Deutschland |
| Email/URL | https://www.decobusgroup.de |
| Hersteller | Dongguan Yihong Hardware electronics Co.,Ltd |
| Adresse | Room 1106,No.2 Shangheng Road, Chang'an Town Dongguan,Guangdong,China |
| Email/URL | https://262762219@qq.com |
| Partienummer | YH-358 |
| Hergestellt in | China |
| EC REP | Decobus Handel GmbH<br>Innungsstraße 9, 21244 Buchholz,Deutschland<br>www.decobusgroup.de |

Product Name:LED controller
Model:YH-358
Rated voltage:DC5-24V
Rated frequency:50-60HZ
Power:10W