ASSEMBLY INSTRUCTIONS

MODEL : BD334B-FS

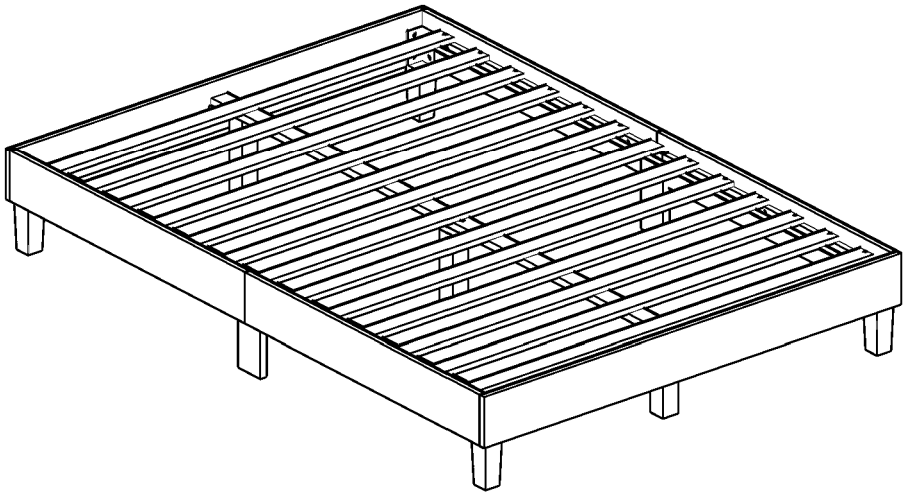

COMPONENT

Headboard/ Footboard - 2 pcs.  (1)	Side Rail (Left) - 2 pcs.  (2L)	Side Rail (Right)- 2 pcs.  (2R)	Side Rail Leg - 2 pcs.  (3)	Bed Leg - 4 pcs. 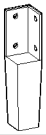 (4)	Center Leg - 2 pcs.  (5)	Center Leg (Middle) - 1 pc. 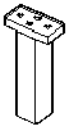 (6)	Center Rail - 2 pcs. 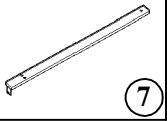 (7)
Slats - 13 pcs.(1set) 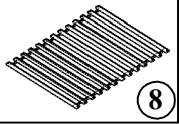 (8)							

HARDWARE

Allen Key M4 - 1 pc.  (A)	Allen Key M5 - 1 pc.  (B)	JCBB Bolt M8 x 16mm - 16 pcs.  (C)	JCBC Bolt M6 x 40mm - 4 pcs.  (D)	JCBC Bolt M6 x 35mm - 10 pcs.  (E)	Wood Screw M4 x 20mm - 2 pcs.  (F)	Wood Screw M4 x 25mm - 24 pcs.  (G)

ASSEMBLY INSTRUCTIONS

STEP 1 :

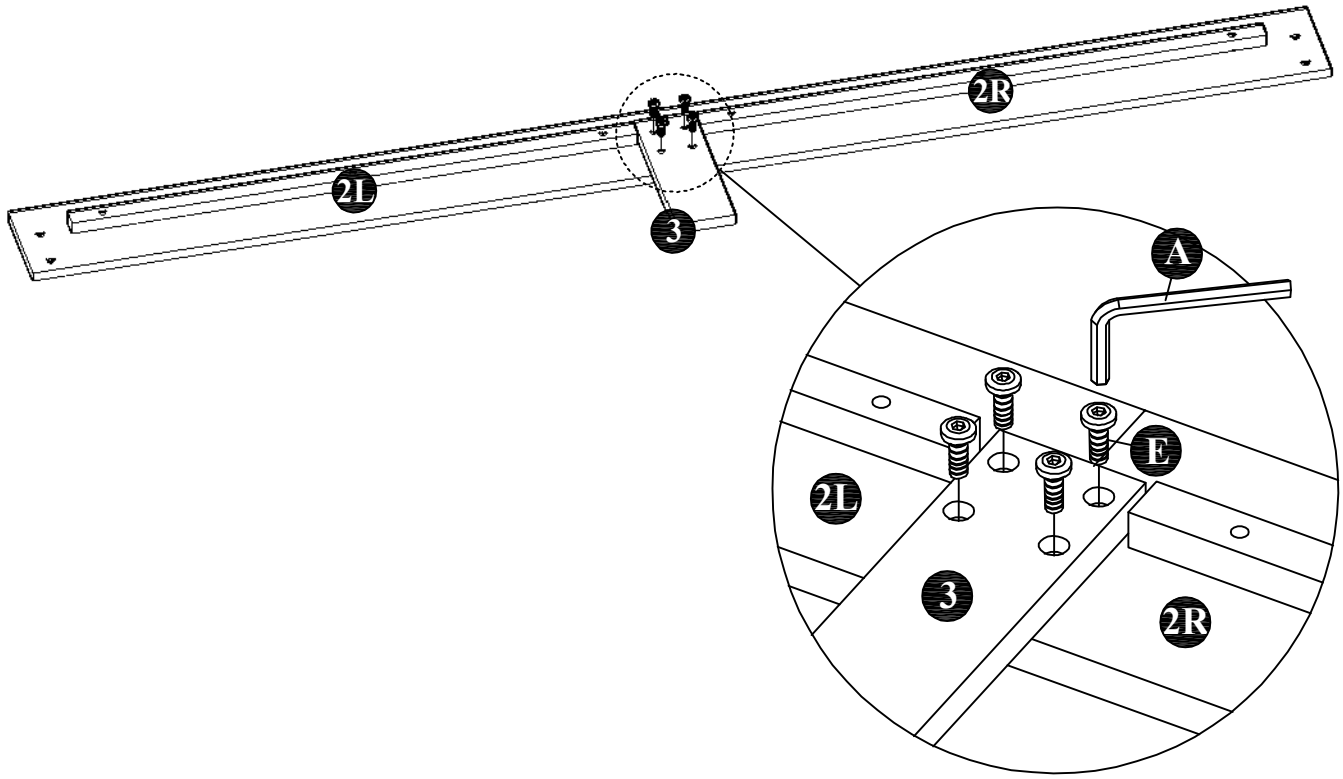

STEP 2 :

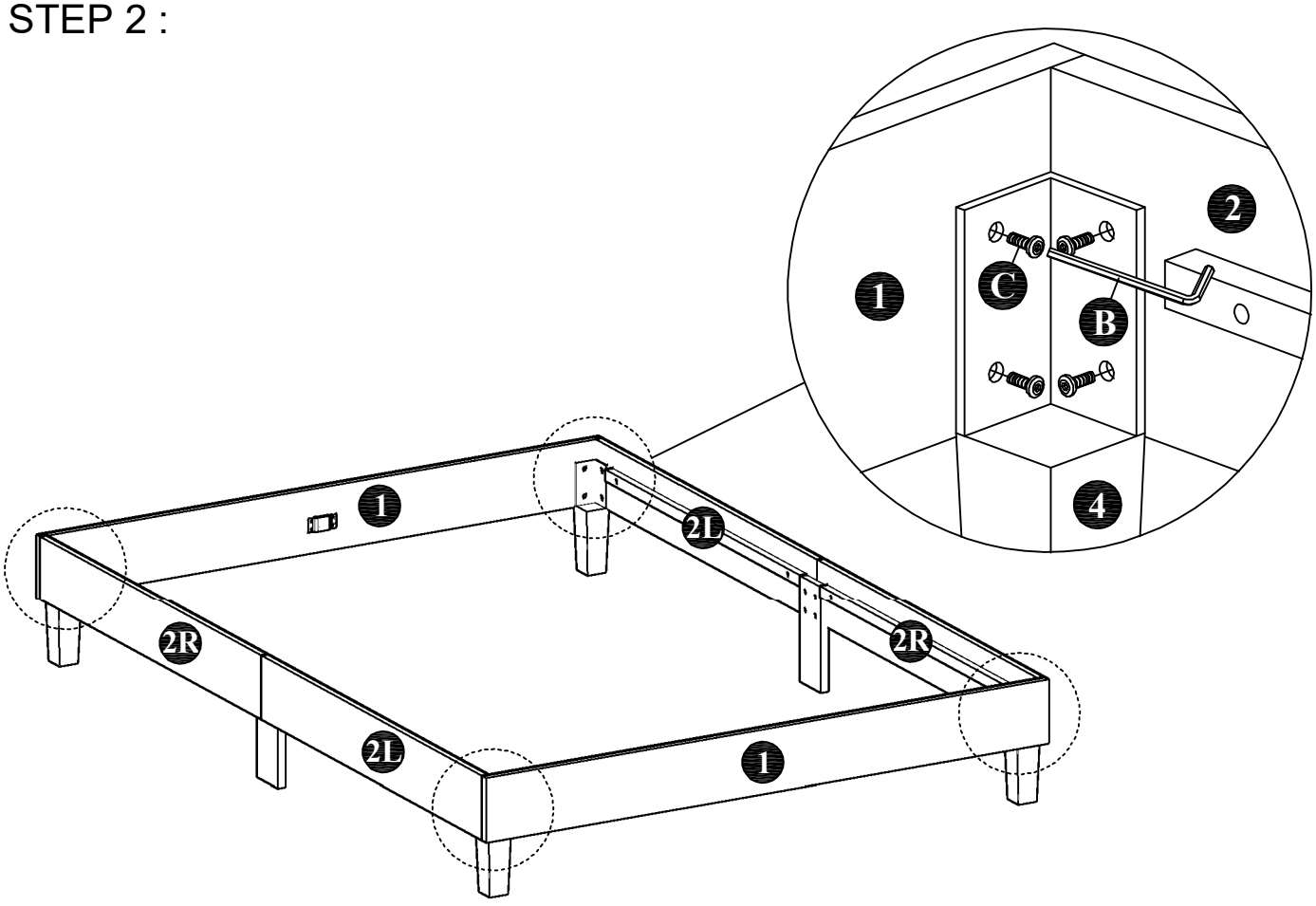

ASSEMBLY INSTRUCTIONS

STEP 3 :

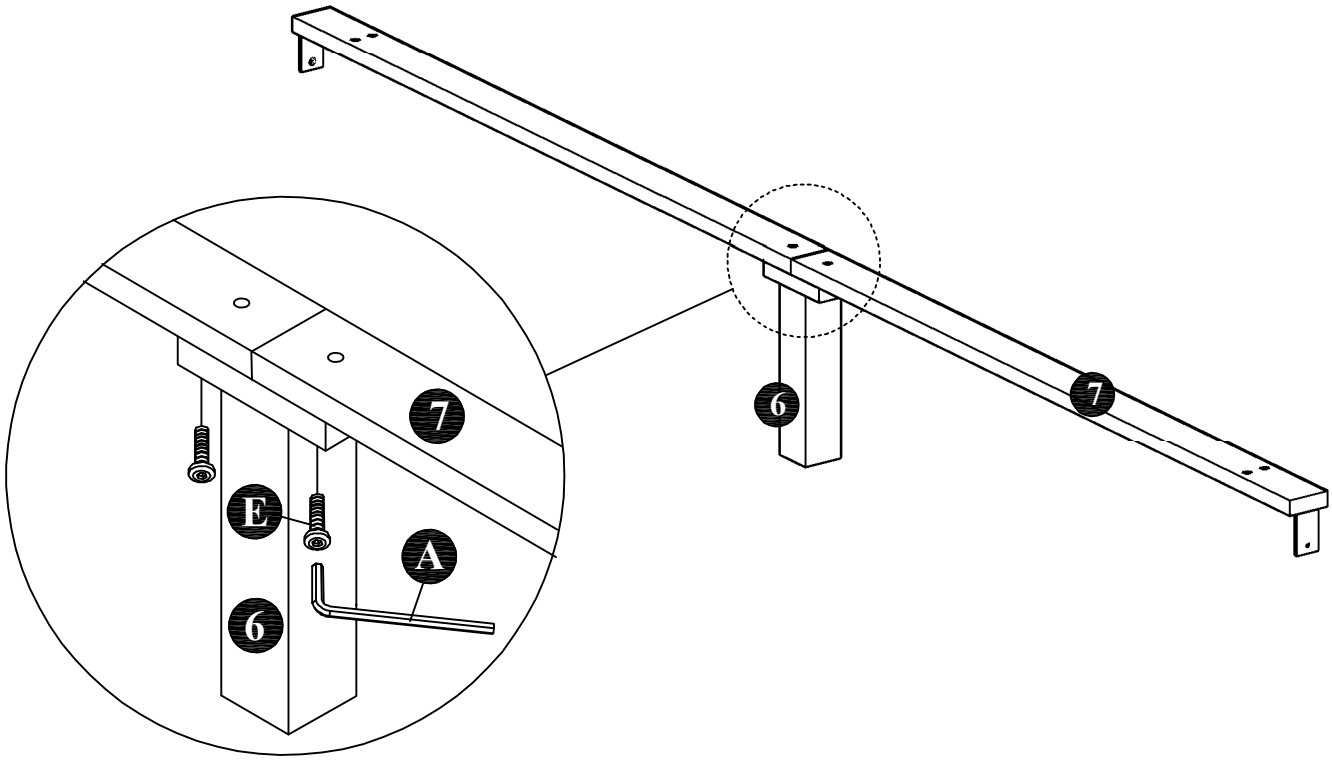

STEP 4 :

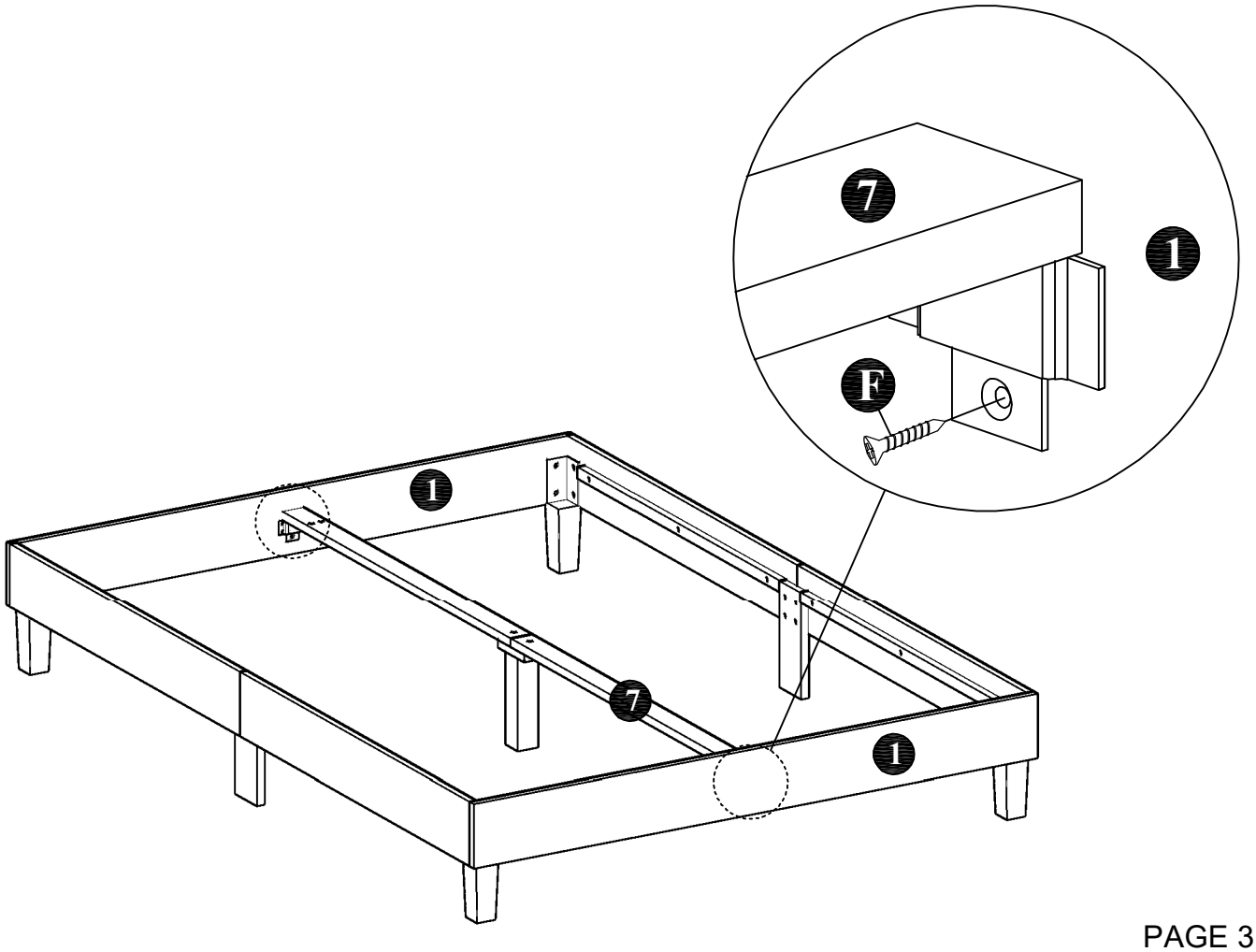

ASSEMBLY INSTRUCTIONS

STEP 5 :

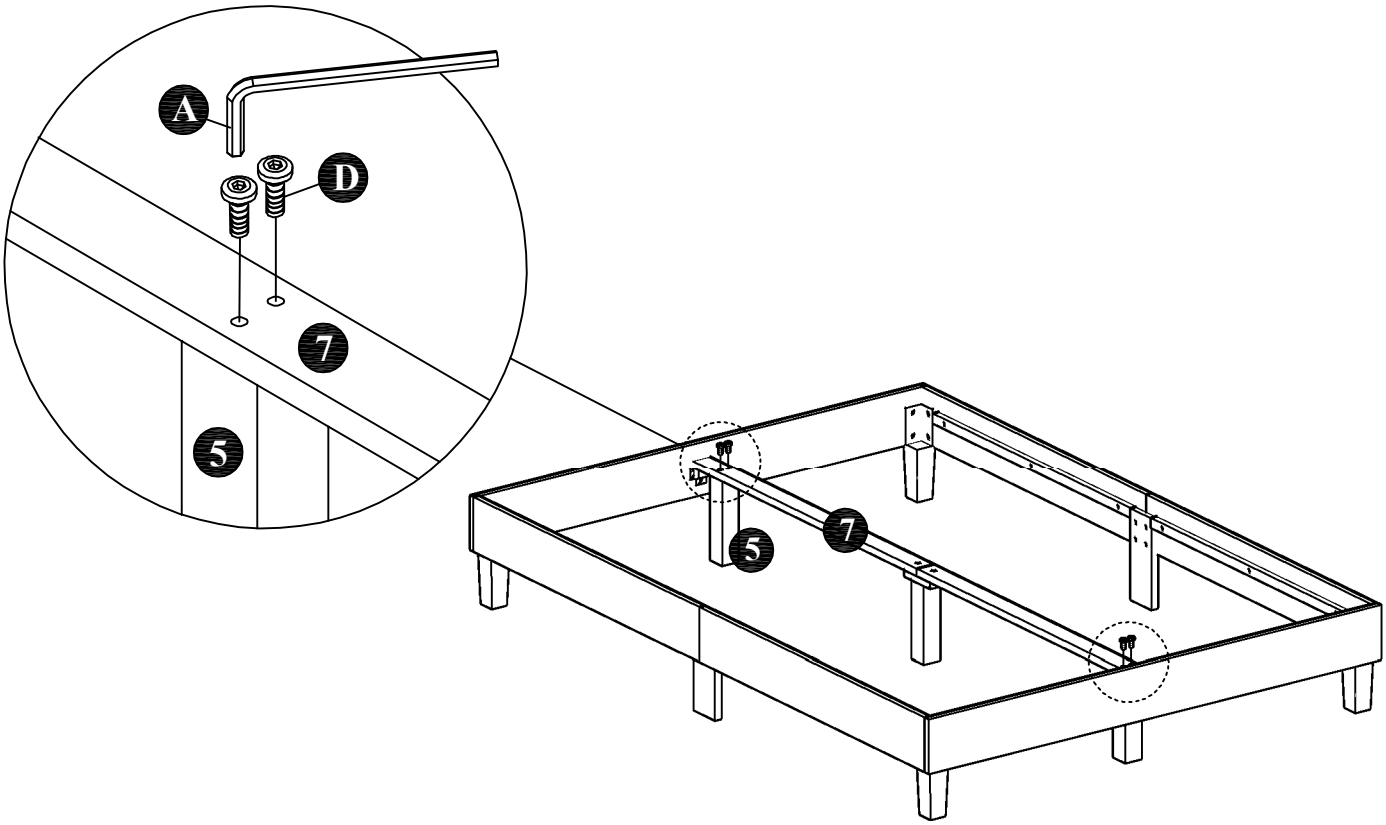

STEP 6 :

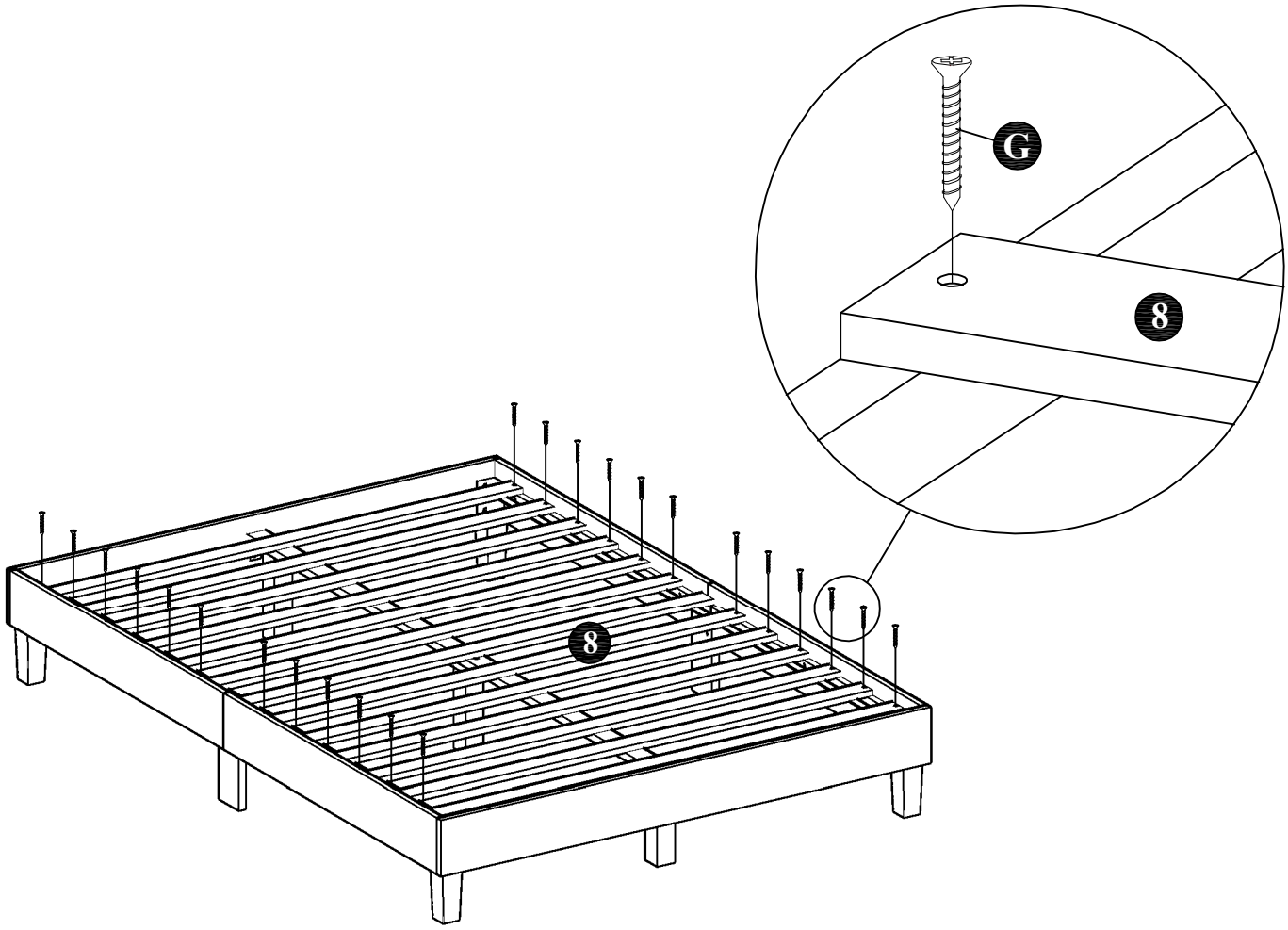

COMPLETE VIEW

IMPORTANT
Please lift up the bed to move
with 2 or more people.
DO NOT DRAG THE BED!

