BELFAST

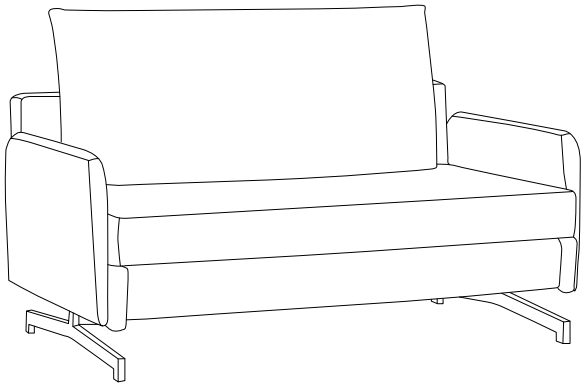

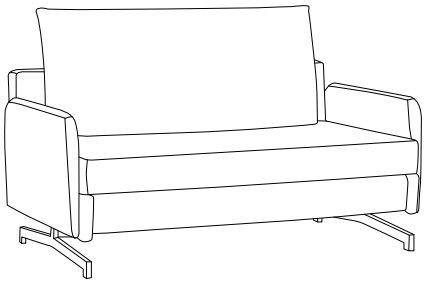

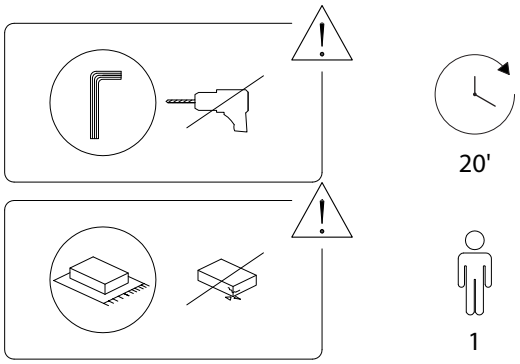

A	B	C	D	E
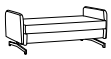			M8 x 16	
x 1	x 1	x 1	x 2	x 1

C

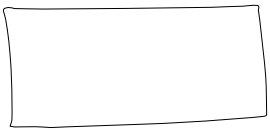

B

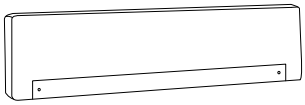

A

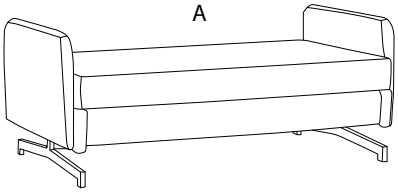

1

A

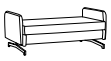

x 1

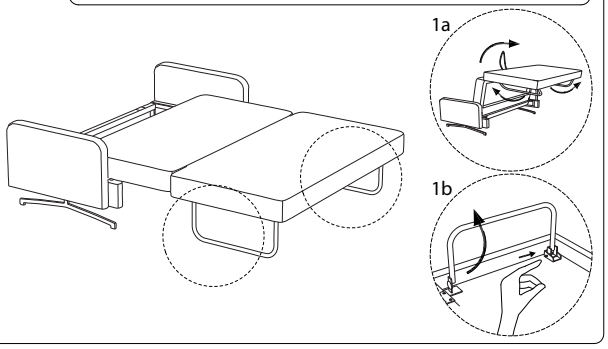

2

B	D	E
	M8 x 16	
x 1	x 2	x 1

B

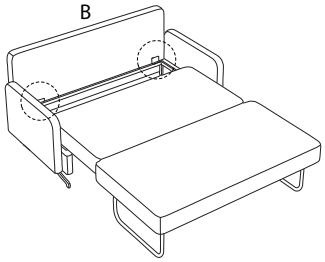

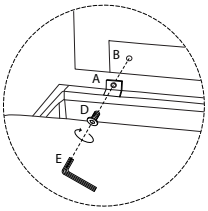

!

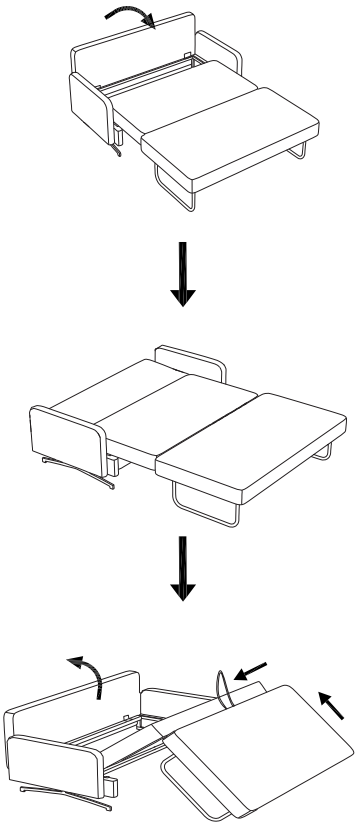
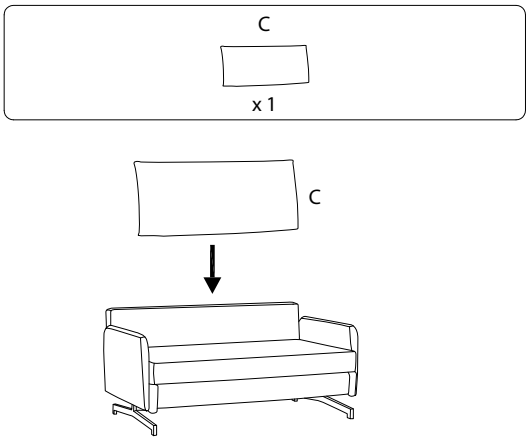
3