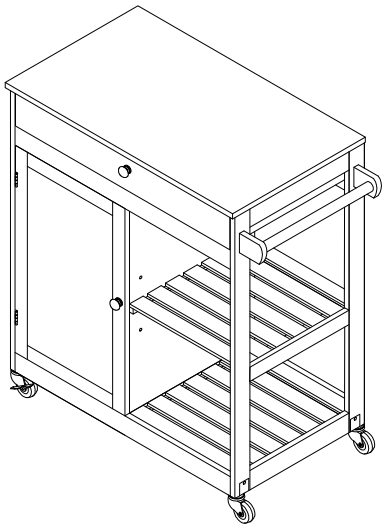

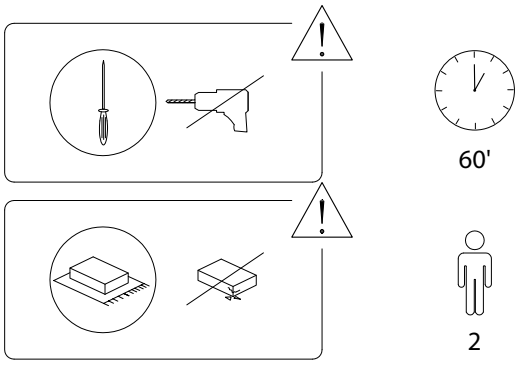

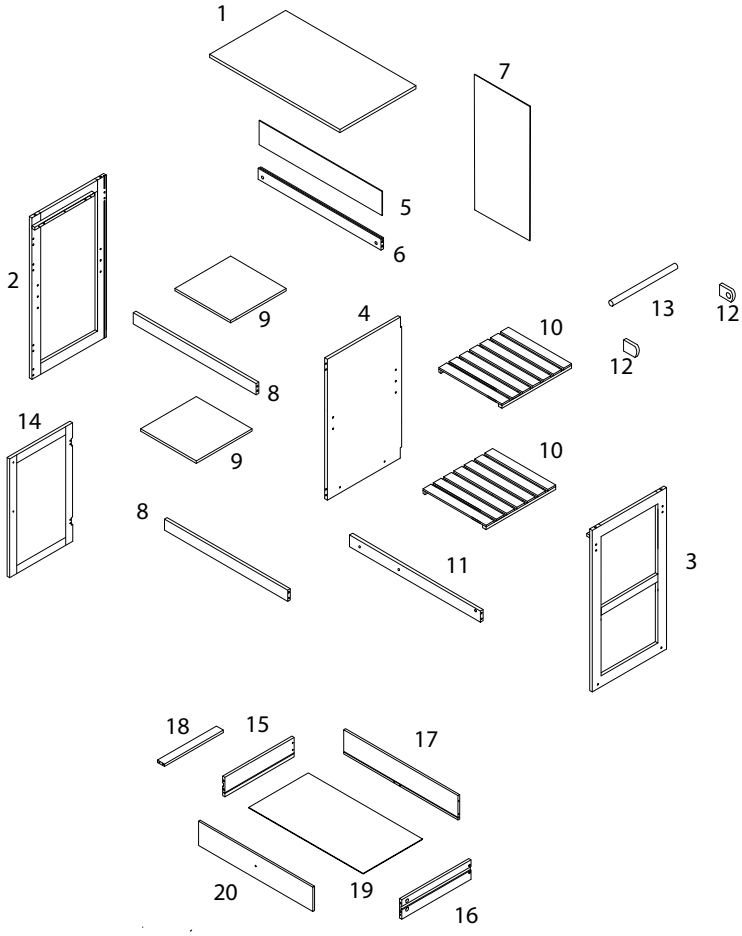

1 x 1	2 x 1	3 x 1	4 x 1
5 x 1	6 x 1	7 x 1	8 x 2
9 x 2	10 x 2	11 x 1	12 x 2
13 x 1	14 x 1	15 x 1	16 x 1
17 x 1	18 x 1	19 x 1	20 x 1

A x 21	B x 21	C x 16	E M4 x 25 x 8
F M3 x 12 x 11	G M3 x 14 x 2	I M6 x 30 x 4	J M6 x 45 x 2
K x 4	L1 x 8	L2 M3 x 14 x 8	M x 2
N x 2	O x 16	P x 2	Q x 1
R x 1	S x 2	T x 2	U x 1	V x 1

1

1	A	C	F	U
x 1	x 4	x 4	M3 x 12 x 1	x 1

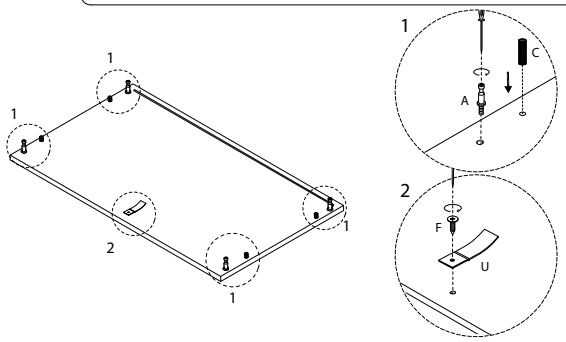

2

4	G	Q
x 1	M3 x 14 x 2	x 1

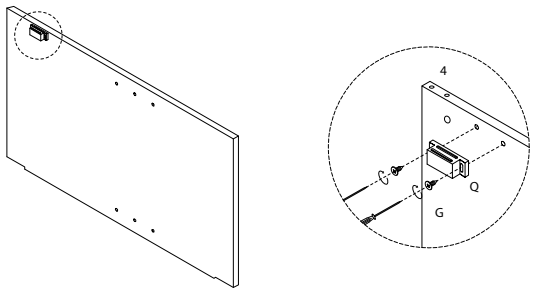

3

14	F	P	R
x 1	M3 x 12 x 6	x 2	x 1

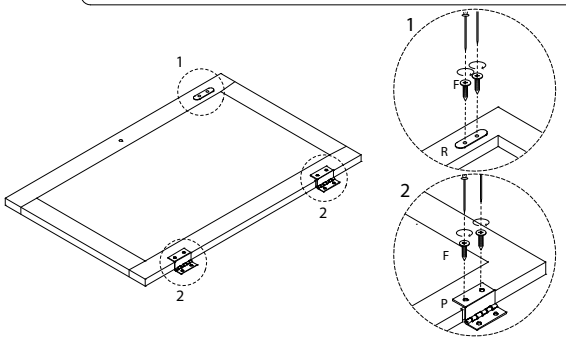

4

6	11	A	C
x 1	x 1	x 2	x 6

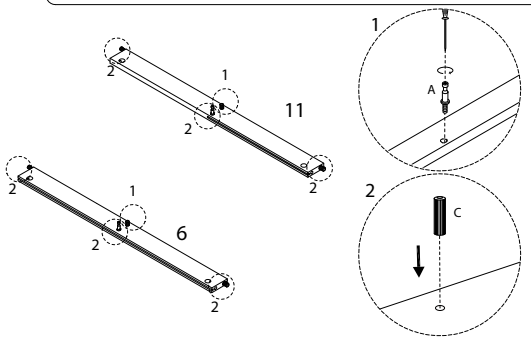

5

8	A	C
x 2	x 2	x 6

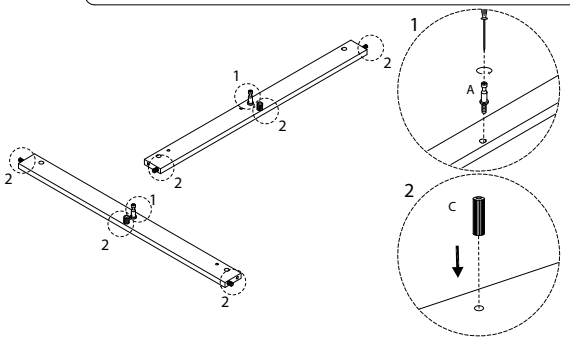

6

2	3	A
x 1	x 1	x 8

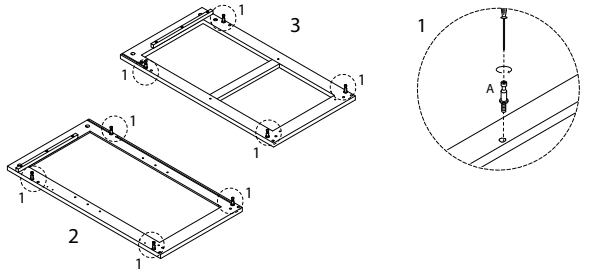

7

12	13
x 2	x 1

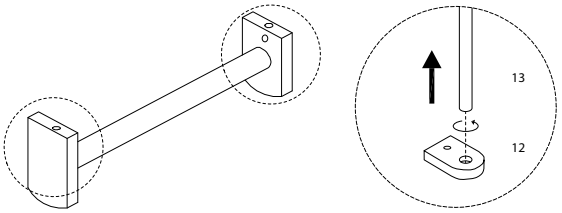

8

J	M
M6 x 45 x 2	x 2

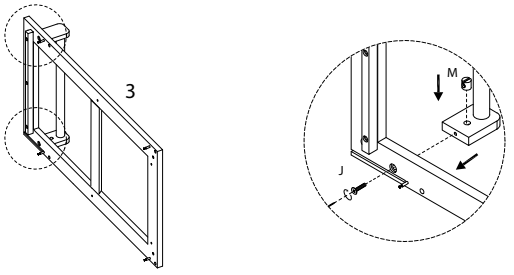

9

B

x 4

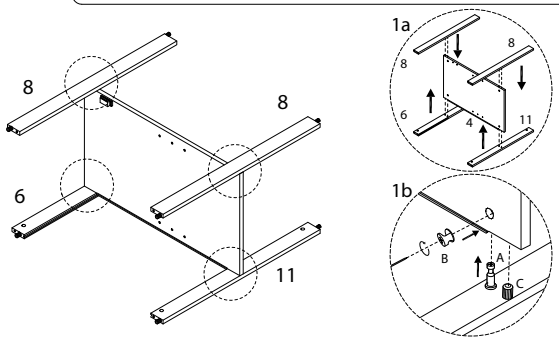

10

B

x 4

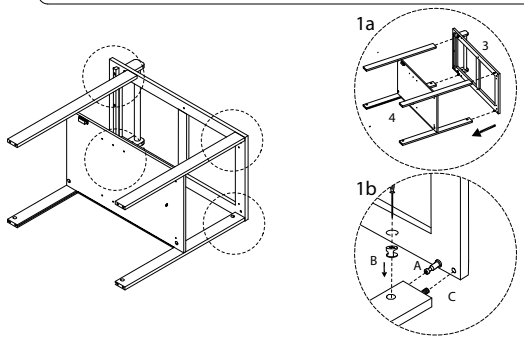

11

7

x 1

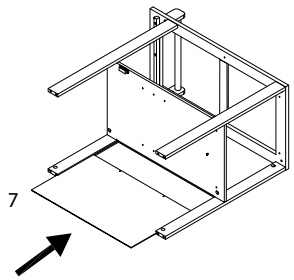

12

B

x 4

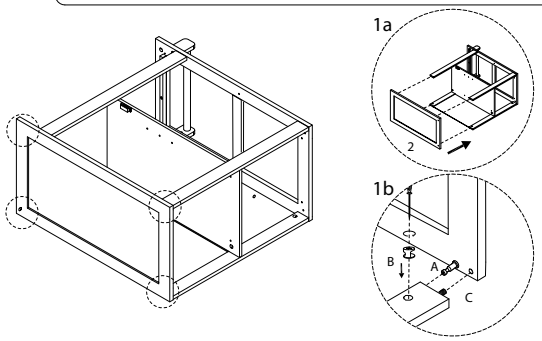

13

I	K	S	T	V
M6 x 30				
x 4	x 4	x 2	x 2	x 1

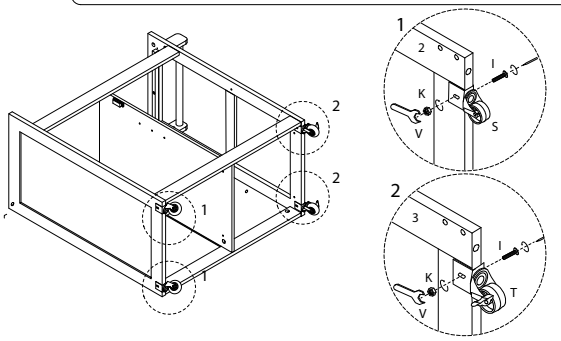

14

5

x 1

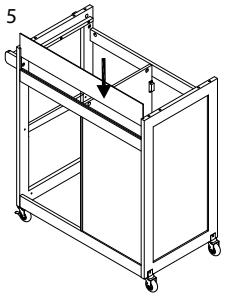

16

B

x 4

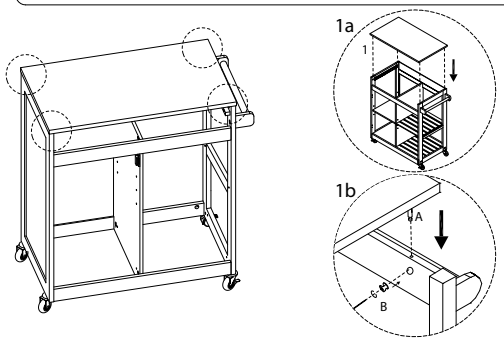

17

L1	L2
	M3 x 14
x 8	x 8

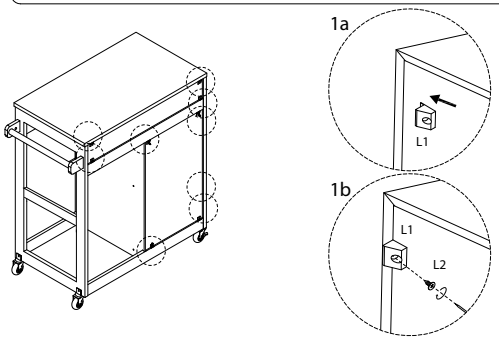

18

O

x 16

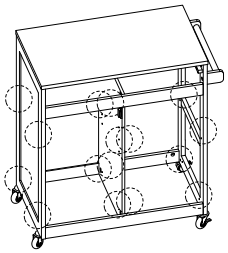

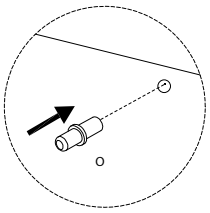

19

9	10
x 2	x 2

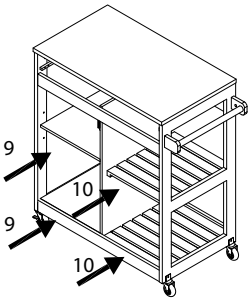

20

F

M3 x 12

x 4

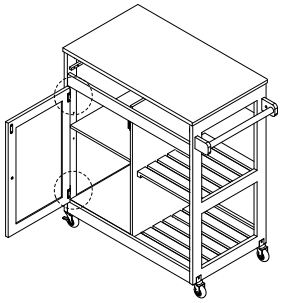

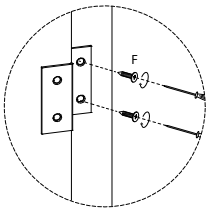

!

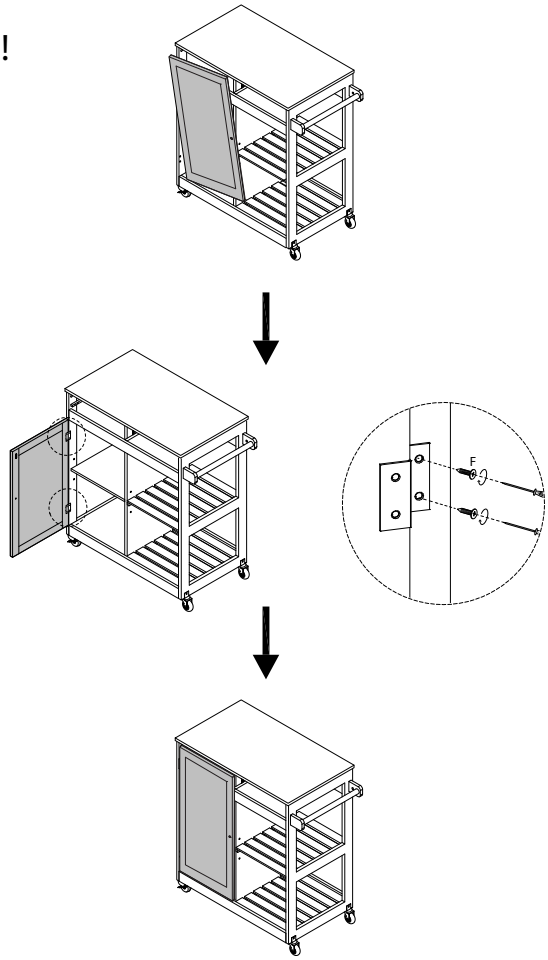

21

N	E
x 1	M4 x 25 x 1

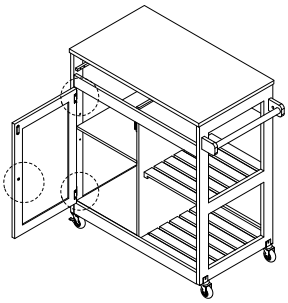

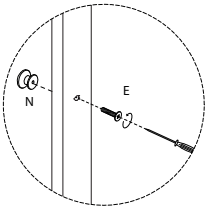

22

20	A
x 1	x 5

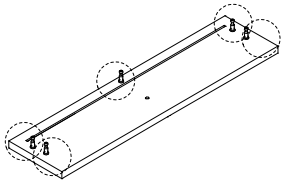

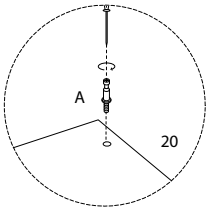

23

15	16	18	B
x 1	x 1	x 1	x 5

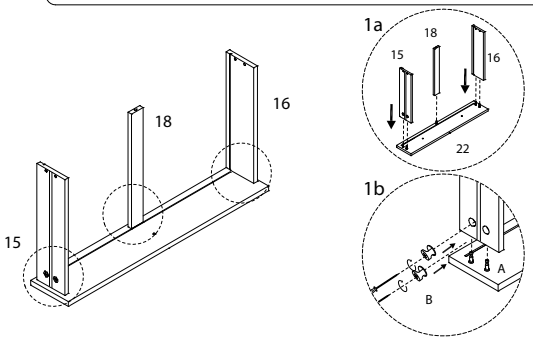

24

19
x 1

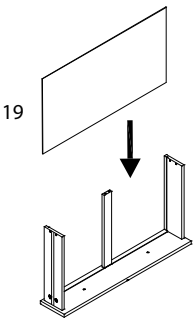

25

17	E
x 1	M4 x 25 x 6

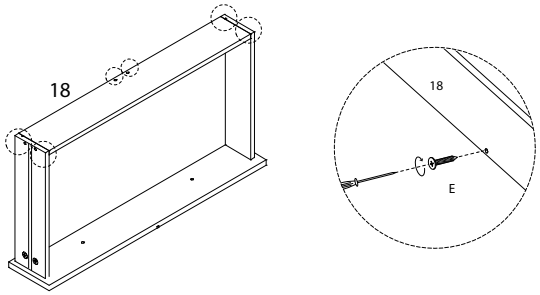

26

N	E
x 1	M4 x 25 x 1

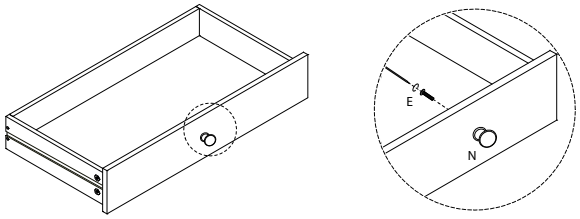
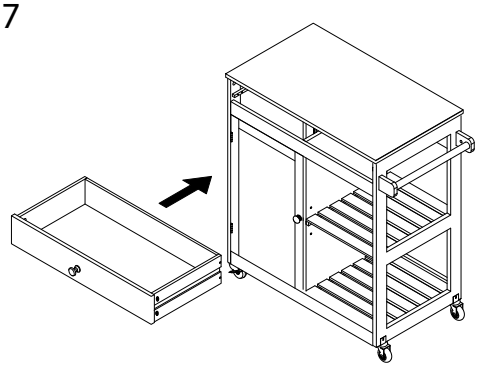
27