VERNOYES

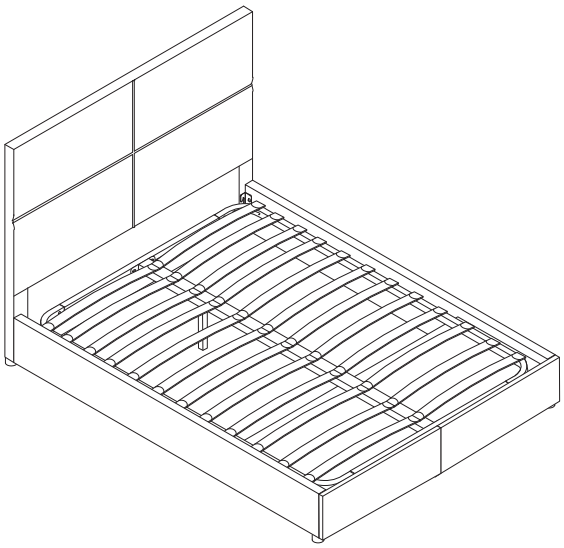

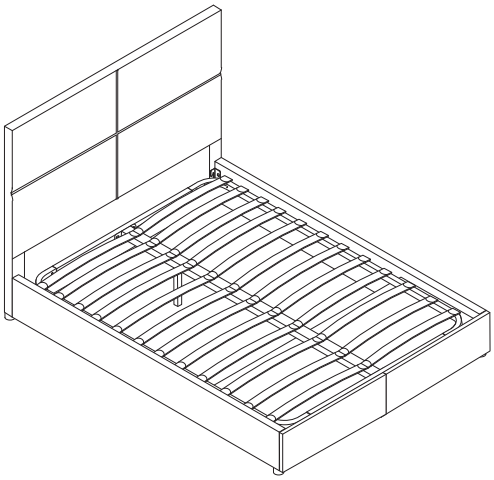

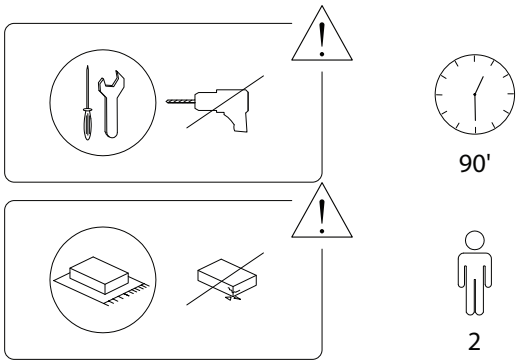

155/VERNOYES/130524/

A

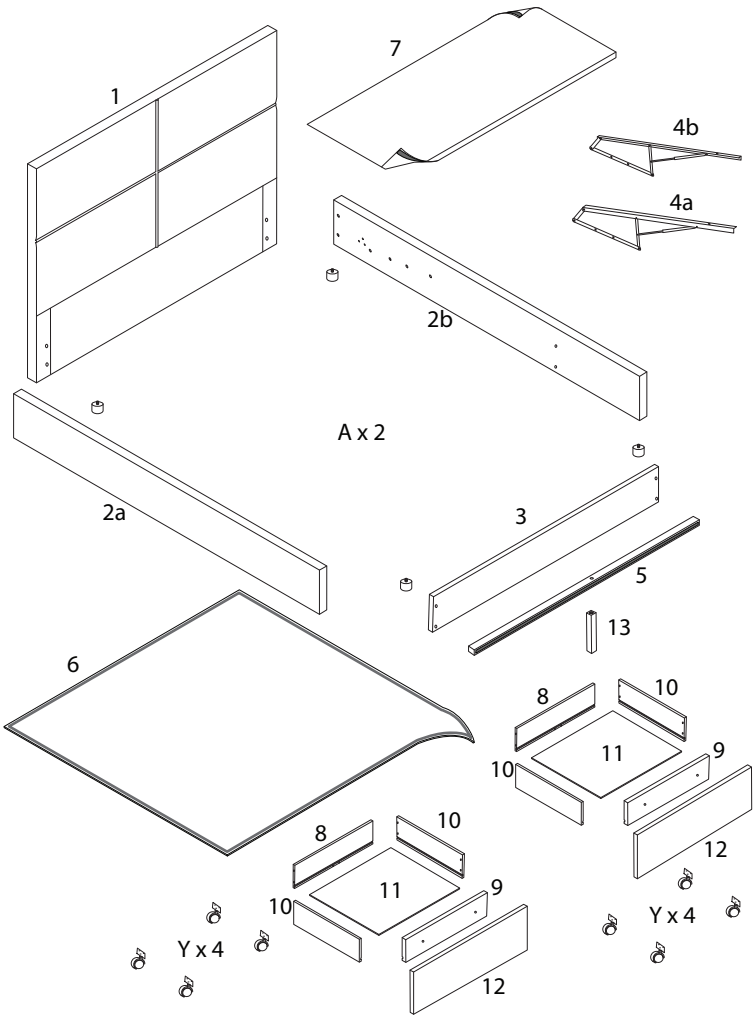

155/VERNOYES/130524/

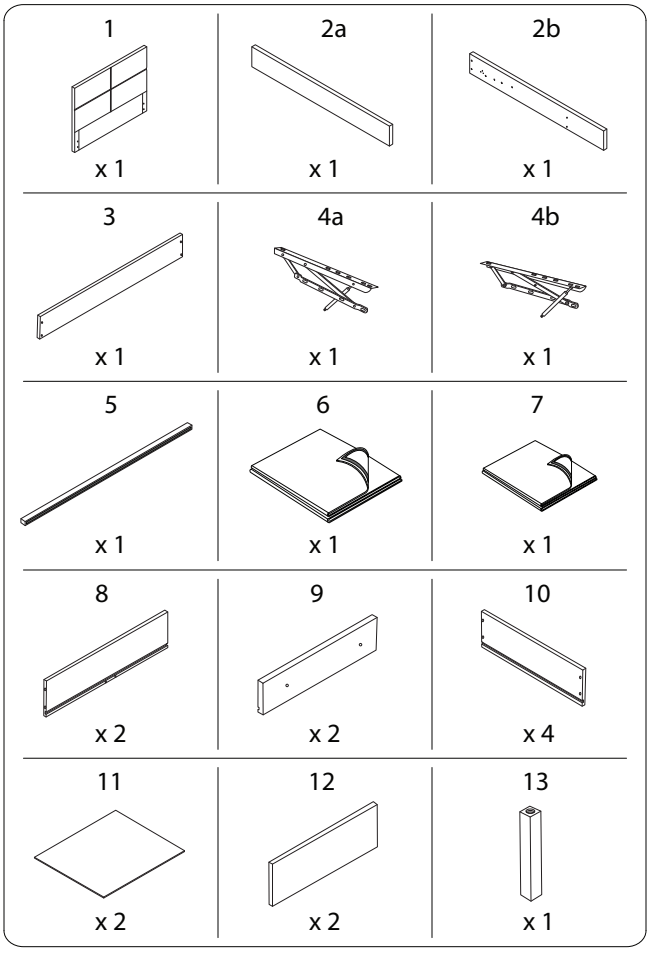

155/VERNOYES/130524/

A	B	C
x 4	x 1	M8 x 25 x 22
D	**E**	**F**
x 4	M8 x 45 x 1	M8 x 30 x 4
G	**H**	**I**
M4 x 25 x 6	M6 x 30 x 8	x 2
J	**Q**	**U**
x 2	x 1	x 2

V	W	X	Y
x 16	x 16	M3 x 16 x 24	x 8

1 x 2

10	V
x 2	x 8

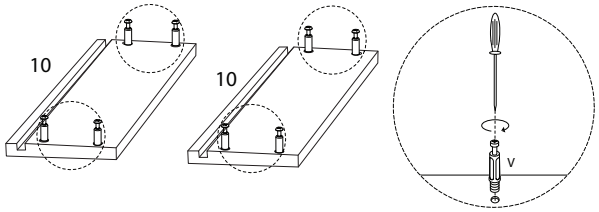

2 x 2

W
x 4

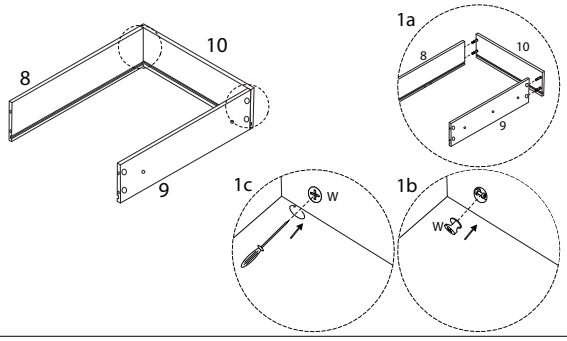

3 x 2

11
x 1

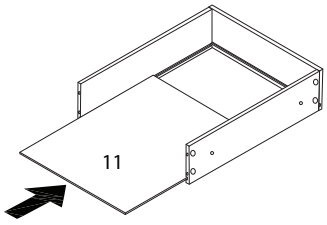

5 x 2

X	Y
M3 x 16 x 12	x 4

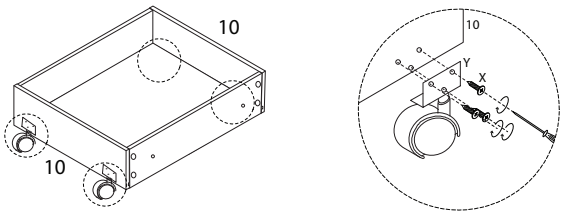

4 x 2

W
x 4

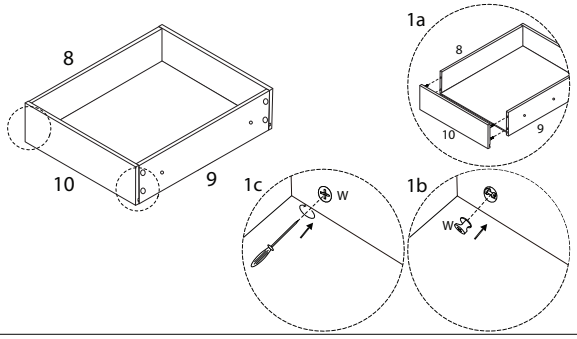

6 x 2

12	B	F
x 1	x 1	M8 x 30 x 2

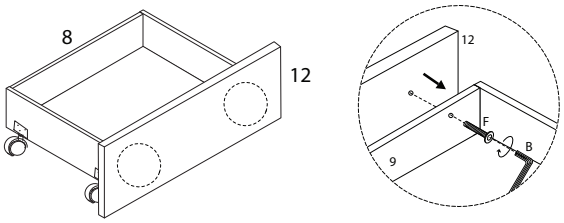

7

1	2a	2b	A
x 1	x 1	x 1	x 4

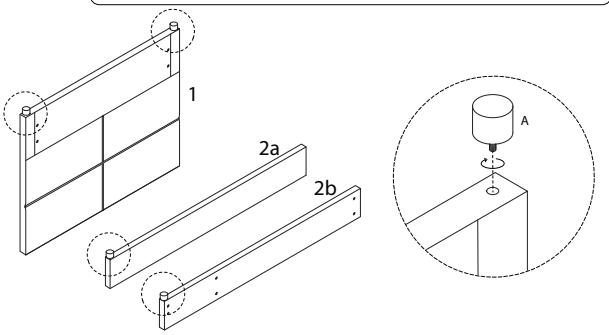

8

3	B	C	D
x 1	x 1	M8 x 25 x 8	x 4

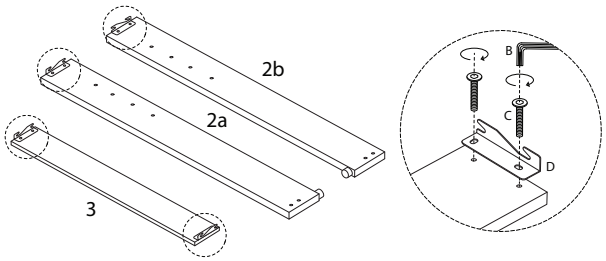

9

B	C
x 1	M8 x 25 x 8

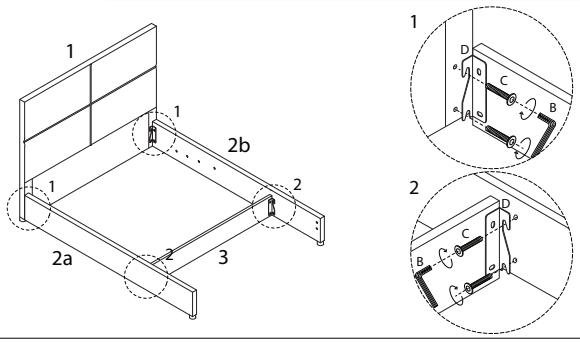

10

5	B	C	J
x 1	x 1	M8 x 25 x 2	x 2

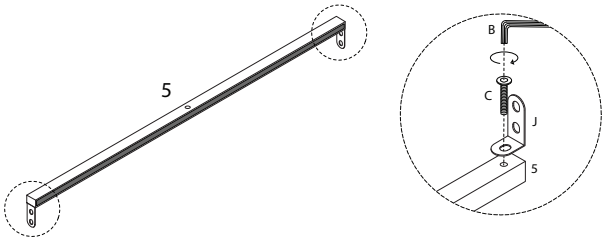

11

B	E	13
x 1	M8 x 45 x 1	x 1

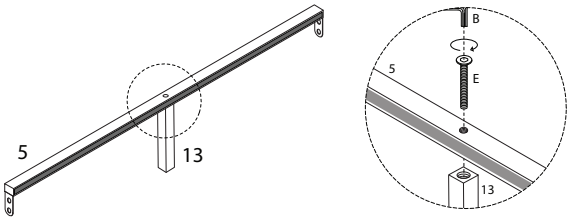

12

6
x 1

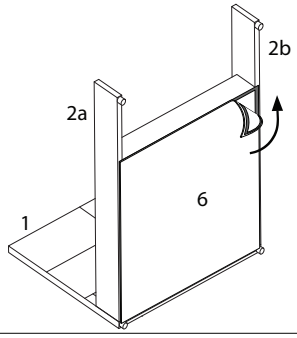

13

B	C
x 1	M8 x 25 x 4

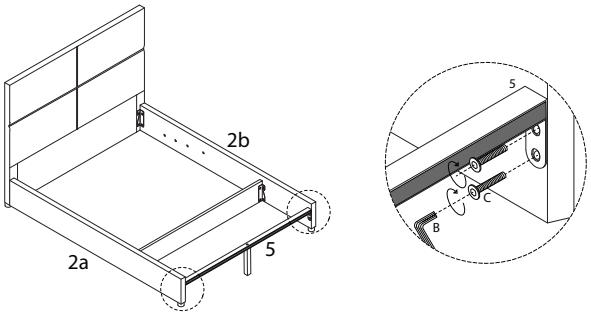

14

G	U
M4 x 25 x 6	x 2

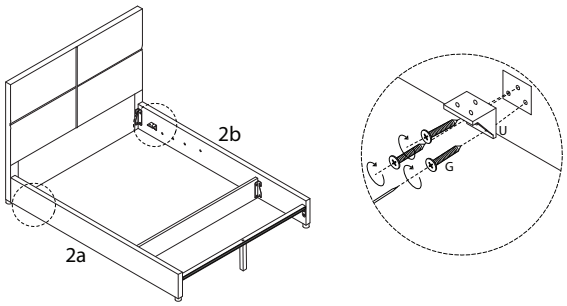

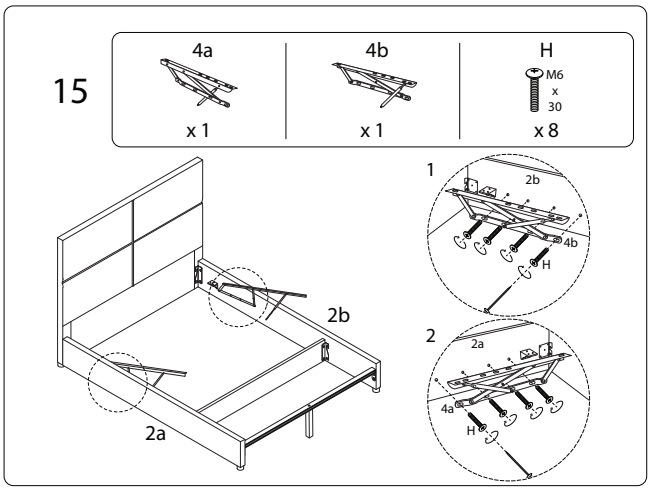
15
4a
x 1
4b
x 1
H
M6
x
30
x 8
2b
2a
1
2b
4b
H
2
2a
4a
H

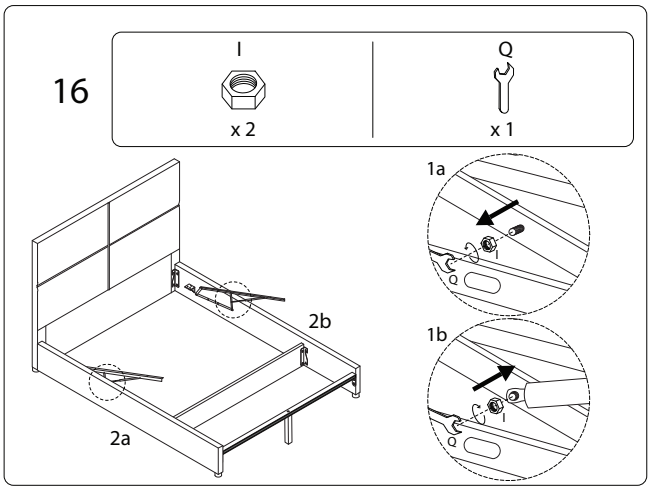
16
I
x 2
Q
x 1
2b
2a
1a
I
Q
1b
I
Q

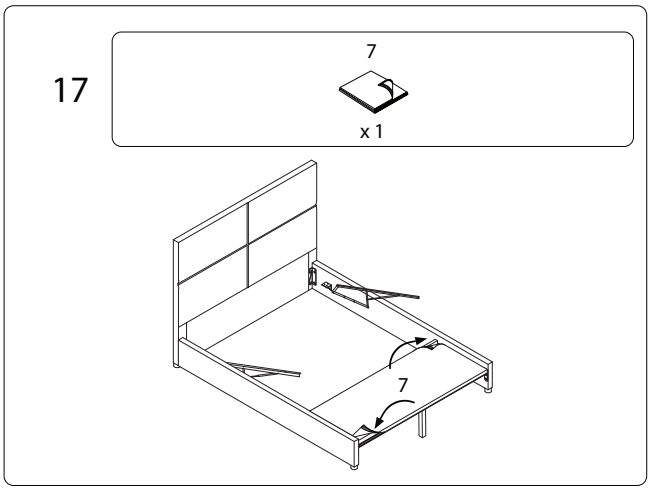
17
7
x 1
7

B

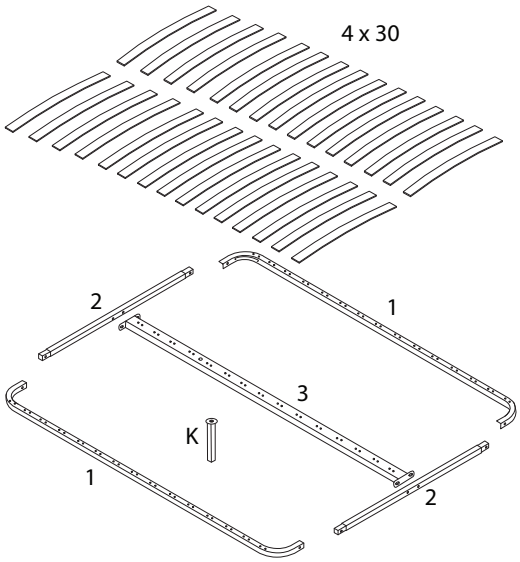
4 x 30
2
1
3
K
1
2

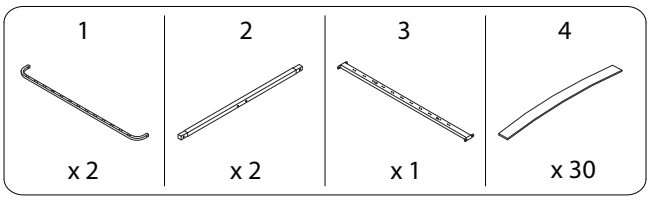
1
x 2
2
x 2
3
x 1
4
x 30

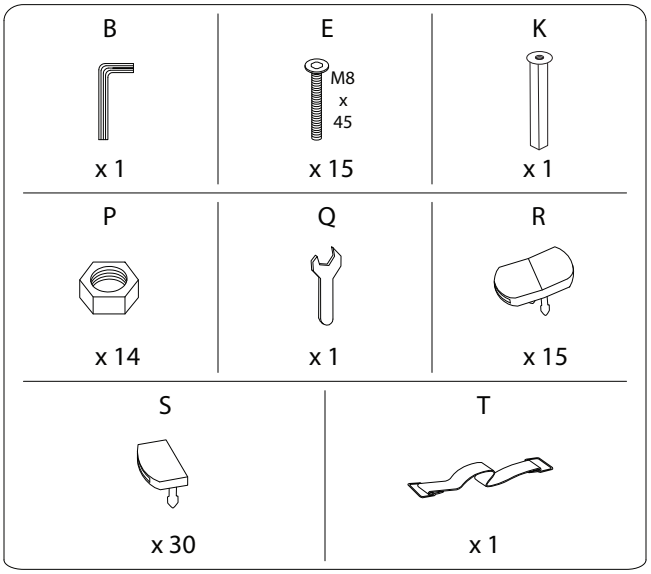
B
x 1
E
M8
x
45
x 15
K
x 1
P
x 14
Q
x 1
R
x 15
S
x 30
T
x 1

1

1	2	B	E	P	Q
x 2	x 2	x 1	M8 x 45 x 4	x 4	x 1

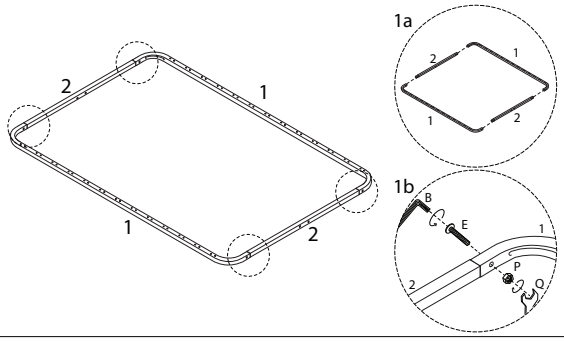

2

3	B	E	K
x 1	x 1	M8 x 45 x 1	x 1

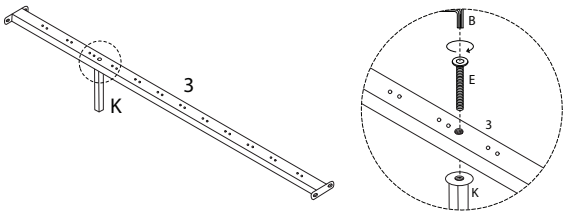

3

B	E	P	Q
x 1	M8 x 45 x 4	x 4	x 1

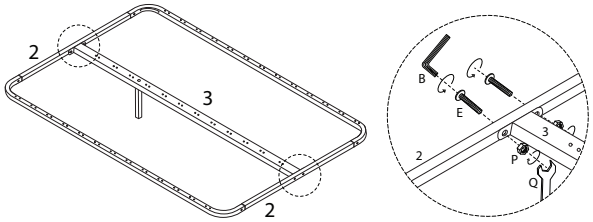

4

T
x 1

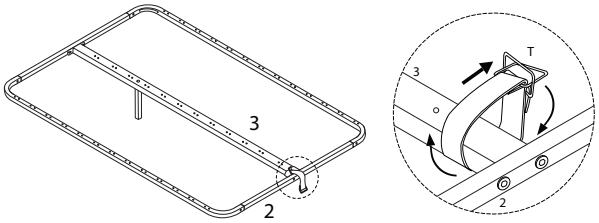

5

B	E	P	Q
x 1	M8 x 45 x 6	x 6	x 1

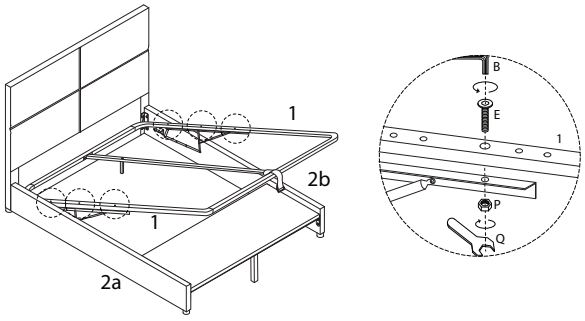

6

4	R	S
x 30	x 15	x 30

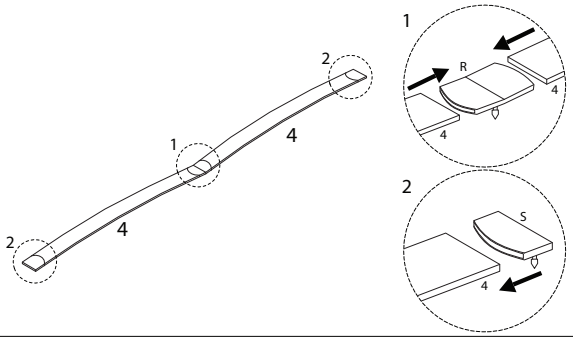

7

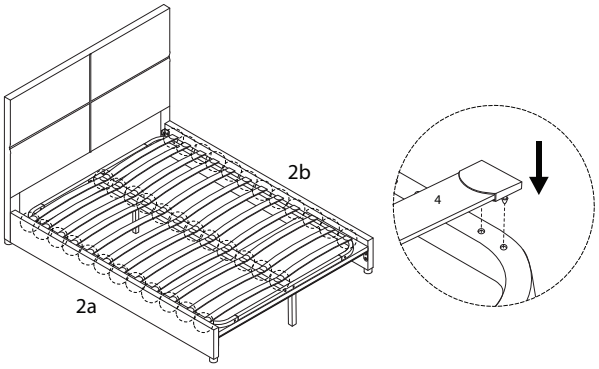
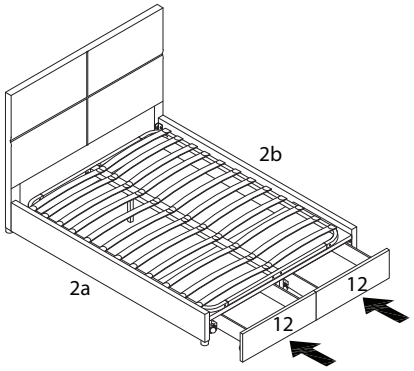
8